Installation manual
(Translation of original language)

EN

innova

N421166A - Rev.07 - 05-2026

..2.0 AUSTRALIA

12 HP AUSTRALIA

icap pty ltd

PO Box 1052
South Perth WA 6107
www.icap.net.au

First of all, we would like to thank you for having chosen a device of our production.

We are sure you will be happy with it because it represents the state of the art in the technology of home air conditioning.

By following the suggestions contained in this manual, the product you have purchased will provide trouble free operation, giving you optimum room temperatures with minimum energy costs.

INNOVA S.r.l.

Markings

TABLE OF CONTENTS

1. Certifications, regulations, and material safety . . . 5
1.1 Conformity . . . 5
1.2 Information on chemical substances . . . 5
1.3 Disposal . . . 5

2. Coding . . . 7
2.1 Product related coding . . . 7

3. General information . . . 8
3.1 About the manual . . . 8
3.2 General warnings . . . 9
3.3 Basic rules of security . . . 10
3.4 Disposal . . . 10

4. Information about R32 refrigerant . . . 12
4.1 Pictograms on the product . . . 12
4.2 Warnings for Installers and Service Centres . . . 12
4.3 Security audits and procedures . . . 12
4.4 Security area . . . 16

5. Product presentation . . . 17
5.1 Identification . . . 17
5.2 Destination of use . . . 17
5.3 Description of the appliance . . . 17
5.4 Components . . . 18
5.5 Compatible accessories . . . 18

6. Installation . . . 21
6.1 Preliminary warnings . . . 21
6.2 Reception . . . 21
6.3 Dimensions and weights with packaging 22
6.4 Handling with packaging . . . 22
6.5 Storage . . . 23
6.6 Unpacking . . . 23
6.7 Handling without packaging . . . 24
6.8 Installation site . . . 24
6.9 Installation mode . . . 24
6.10 Installation minimum distances . . . 25
6.11 Positioning . . . 25
6.12 Condensation drain preparation . . . 29
6.13 Electric connections . . . 30
6.14 High/low installation configuration . . . 33
6.15 Operations after installation . . . 34
6.16 Removal of aesthetic panels and grilles . 35
6.17 Assembly of aesthetic panels and grilles 36

7. Touchpad and remote control . . . 37
7.1 Interface . . . 37
7.2 Basic menu . . . 38
7.3 Advanced Menu . . . 39
7.4 Visualization of alarms on display . . . 41

8. M7 series control EEB749 . . . 42
8.1 Interface . . . 42
8.2 Installation . . . 43
8.3 Single connection diagram . . . 45
8.4 Connections . . . 46
8.5 Basic menu . . . 46
8.6 Advanced Menu . . . 48
8.7 Alarm display on wall control panel . . . 49

9. M7 Series Commands EFB749 . . . 50
9.1 Interface . . . 50
9.2 Installation . . . 51
9.3 Single connection diagram . . . 53
9.4 Multiple connection diagram . . . 54
9.5 Connections . . . 55
9.6 Functions . . . 56

10. Maintenance . . . 59
10.1 Preliminary warnings . . . 59
10.2 Routine maintenance . . . 59

11. Troubleshooting . . . 61
11.1 Troubleshooting table . . . 61
11.2 Visualization of alarms on display . . . 61
11.3 Diagnosis of possible anomalies . . . 62

12. Technical information . . . 64
12.1 Technical data . . . 64
12.2 Dimensions . . . 65
12.3 RED Compliance Statement . . . 65
12.4 Safety . . . 66

12.5 FCC Declaration of Conformity. *66*

1. CERTIFICATIONS, REGULATIONS, AND MATERIAL SAFETY

1.1 Conformity

This unit complies with the European directives:

- EN 60335-2-40 Household and similar electrical appliances - Safety Part 2-40: Particular requirements for electrical heat pumps, air-conditioners and dehumidifiers
- Low voltage 2014/35/EU
- EMC 2014/30/EU
- RED 2014/53/EU on the harmonisation of the laws of the Member States relating to the making available on the market of radio equipment
- RoHS 2011/65/UE
- 2017/1369/EU on energy labelling
- 2009/125/CE implementing regulation 206/2012/EU and Italian implementing regulation Legislative Decree no. 15 of 16/02/2011

And subsequent amendments.

⚠ For declarations of conformity, certificates and other certification details please consult the website.

1.2 Information on chemical substances

Identification of SVHC substances in components:
In accordance with Article 33(1) of Regulation (EC) No. 1907/2006 (REACH), information on the presence of substances of very high concern (SVHCs) in product components for professional users is provided below.

Based on the data provided, the following SVHCs present in concentrations greater than 0.1 percent by weight in one or more components of the product were identified:

Products

Model	Component	Substance name	N° CAS	Instructions on safe use
..2.0 - 12 HP AUSTRALIA	Thermostatic actuator	Lead	7439-92-1	Identification of the substance on the candidate list is sufficient to allow safe use of the article throughout its life cycle, including service life, dismantling, and disposal/recycling phase.

⚠ Avoid environmental dispersion of lead-containing materials.

⚠ Comply with REACH regulations during installation, maintenance and disposal.

⚠ Handle lead-containing components according to current environmental safety and disposal regulations.

1.3 Disposal

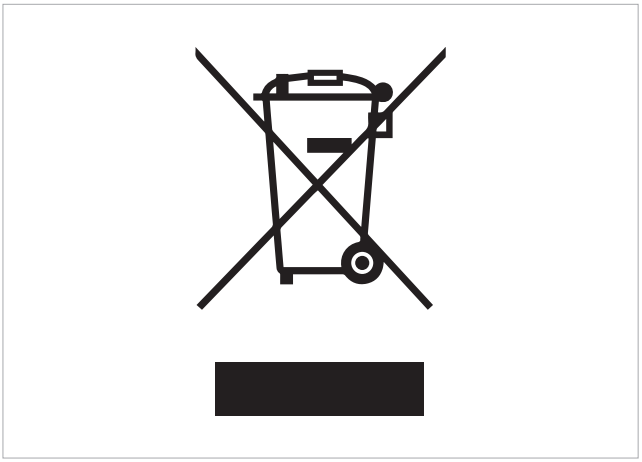

The symbol on the product or packaging indicates that the product must not be treated as normal household waste, but must be taken to the appropriate collection point for recycling of used electrical and electronic equipment and batteries.
Proper disposal of this product avoids harm to humans and the environment and promotes the reuse of valuable raw materials.
For more detailed information about the recycling of this product, contact your local authority, your household waste disposal service or the shop where you purchased the product.
Illegal disposal of the product by the user involves the application of the administrative sanctions provided for by the regulations in force.
This provision is valid in the EU Member States.

⚠ Avoid disassembling the unit yourself.

⚠ **Contact an Authorized Service Center to disassemble the appliance.**

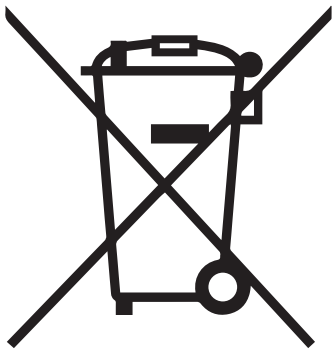

This symbol might be used in combination with a chemical symbol.
In this case, it complies with the requirement set by the Directive for the chemical involved.

2. CODING

2.1 Product related coding

This instruction manual refers to the following product codes.

⚠ Check the correspondence with the technical rating plate on the product. See chapter "Identification" *p. 17*.

	..2.0 - 12 HP AUSTRALIA
C010010132	..2.0 - 12HP AUSTRALIA

3. GENERAL INFORMATION

3.1 About the manual

This manual was written to provide all the explanations for the correct management of the device.

⚠ This instruction manual forms an integral part of the device and therefore must be carefully preserved and must ALWAYS travel with it, even if you transfer the device to another owner or relocate it to other premises. If the manual gets damaged or lost, download a copy from the website.

⚠ Read this manual carefully before proceeding with any operation and follow the instructions in the individual chapters.

⚠ The Manufacturer accepts no liability for damages to persons or property caused by failure to follow the instructions in this manual.

⚠ This document is restricted in use to the terms of the law and may not be copied or transferred to third parties without the express authorisation of the Manufacturer.

3.1.1 Editorial pictograms

The pictograms in the next chapter provide the necessary information for correct and safe use of the machine in a rapid and unmistakable way.

Related to security

⚠ **High risk warning (bold text)**
- The operation described above presents a risk of serious physical injury, fatality, major damage to the device and/or to the environment if not carried out in compliance with safety regulations.

⚠ Low risk warning (plain text)
- The operation described above presents a risk of minor physical injury or minor damage to the device and/or to the environment if not carried out in compliance with safety regulations.

⊖ Prohibition (plain text)
- Refers to prohibited actions.

ⓘ **Important information (bold text)**
- This indicates important information that must be taken into account during the operations.

In the texts

► procedures
- lists

In the control panels

► actions required
Expected responses following an action.

In the figures

1 The numbers indicate the individual components.
A The capital letters indicate component assemblies.
❶ The white numbers in black marks indicate a series of actions to be carried out in sequence.
Ⓐ The black letter in white identifies an image when there are several images in the same figure.

3.1.2 Pictograms on the product

Symbols are used in some parts of the device:

Related to security

Read instruction manual
- Read the instructions carefully before performing any work on the device.

Instruction manual
- Read the information available in the technical documentation of the device.

Caution: electrical danger
- The concerned personnel is informed to the presence of electricity and the risk of suffering an electric shock.

Related to refrigerant R32

Caution: low flammability material
- R32 refrigerant gas is mildly flammable and odourless. Avoid proximity to sources of ignition in continuous operation (open flames, gas appliances, electric stoves, lighted cigarettes, etc.).

Instructions for the Authorised Service Centre
- The Authorised Service Centre must read the instructions carefully before performing any work on the appliance.

3.1.3 Recipients

User
Non-expert person capable of operating the product in safe conditions for people, for the product itself and the environment, interpreting an elementary diagnostic of faults and abnormal operating conditions, carrying out simple adjustment, checking and maintenance operations.

Installer
Expert person qualified to position and connect (hydraulically, electrically, etc.) the unit to the plant; this person is responsible for handling and correct installation according

to the instructions provided in this manual and the national standards currently in force.
To work on the refrigeration circuit, the installer must comply with the provisions of Regulation 303/2008/EC which defines, in accordance with Directive 842/2006/EC, the requirements for companies and personnel with regard to fixed refrigeration, air conditioning and heat pump equipment containing certain fluorinated greenhouse gases (F-gas licence).

Authorized Service Center
Expert and qualified person authorised directly by the manufacturer to carry out all routine and supplementary maintenance operations, as well as every adjustment, check, repair and replacement of parts necessary during the life of the unit itself.
Service personnel must comply with the provisions of Regulation 303/2008/EC which defines, in accordance with Directive 842/2006/EC, the requirements for companies and personnel with regard to fixed refrigeration, air conditioning and heat pump equipment containing certain fluorinated greenhouse gases (F-gas licence).

3.1.4 Manual organization

The manual is divided into sections each dedicated to one or more target groups.

Coding
It addresses all recipients.
It contains the list of products and/or accessories referred to in the manual.

General information
It addresses all recipients.
It contains general information and important warnings that should be known before installing and using the device.

Product presentation
It addresses all recipients.
It contains the information to identify the product, its components, compatible accessories and destination of use.

Installation
It is addressed exclusively to the installer.
It contains specific warnings and all the information necessary for positioning, mounting and connecting the appliance.

Commissioning, maintenance and troubleshooting
They are addressed exclusively to the Authorized Service Center.
It contains specific warnings useful information for the most common commissioning and routine maintenance.

Technical information
It addresses all recipients.
It contains detailed technical information about the appliance.

3.2 General warnings

⚠ **Please refer to chapter "Information about R32 refrigerant"** *p. 12* **for safety warnings concerning the refrigerant.**

⚠ Specific warnings are given in each chapter of the document and must be read before starting operations.

⚠ All personnel involved must be aware of the operations and dangers that may arise when beginning all unit installation operations.

⚠ Installation performed outside the warnings provided in this manual and use of the appliance outside the prescribed temperature limits will invalidate the warranty.

⚠ The installation and maintenance of climate control equipment could be dangerous because there is pressurised refrigerant gas and live electrical components inside the appliances. The installation and subsequent maintenance phases must be carried out exclusively by authorised and qualified personnel.

⚠ Any contractual or extra-contractual liability for damage caused to persons, animals or property, due to installation adjustment and maintenance errors, or improper use, is excluded. All uses not expressly indicated in this manual are not permitted.

⚠ Only suitably qualified installers are authorized to install the device. After having completed installation, the installer will issue a declaration of conformity to the plant manager, as required by the applicable standards and the guidelines provided by contractor's instruction manual supplied with the device.

⚠ First start-up and repair or maintenance operations must be carried out by the Technical Assistance Center or by qualified personnel following the provisions of this manual.

⚠ Do not modify or tamper with the appliance as this can lead to dangerous situations.

⚠ Use suitable personal protective clothing and equipment during installation and/or maintenance operations. The Manufacturer is not liable for the non-observance of the current safety and accident prevention regulations.

⚠ Do not use any means or tools to accelerate the defrosting process or for cleaning other than those recommended by the manufacturer.

⚠ The appliance must be stored in a room without sources of injection in continuous operation (e.g. open flames, a gas appliance in operation or an electric heater in operation).

⚠ In the event of liquid or oil leaks, set the main switch of the plant to "OFF" and isolate water taps where applicable. Call the Authorized Service Center or professionally qualified personnel as soon as possible and do not work on the appliance yourself.

⚠ In case of replacement of parts, use only original parts.

⚠ The Manufacturer reserves the right to make changes to its models at any time to improve its product, without prejudice to the essential characteristics described in this manual. The manufacturer is not obliged to add such modifications to machines previously manufactured, already delivered or under construction.

⚠ The unit can be used by children over the age of 8, and by people with reduced physical, sensory or mental capabilities, or with no experience or necessary knowledge, as long as they are monitored or after they have received instructions on the safe use of the unit and have understood the dangers involved. Children must not play with the appliance. The cleaning and maintenance that must be performed by the user should not be carried out by children without supervision.

3.3 Basic rules of security

Please keep in mind that the use of products powered by electricity and water call for operators to comply with certain essential safety rules:

- The use of the appliance by children and unassisted disabled persons is prohibited.
- It is forbidden to touch the device with wet or damp body parts.
- It is forbidden to carry out any operation before disconnecting the appliance from the power supply by setting the plant main switch to "OFF".
- It is forbidden to modify the safety or adjustment devices, or adjust without authorization and indications of the Manufacturer.
- It is forbidden to pull, unplug or twist the device's electric cables, even if it is disconnected from the mains.
- It is forbidden to introduce objects and substances through the air inlet and outlet grilles.
- It is forbidden to open the access doors of the device's internal parts without first having set main switch of the system to "OFF".
- It is forbidden to incorrectly dispose of the packaging, or leave in the reach of children, which may become a source of danger.

3.3.1 Specific safety rules for R32

This document contains only some of the safety rules related to refrigerant R32. For more comprehensive information, carefully read the safety data sheet available from the dealer.

- Smoking in the vicinity of the appliance is prohibited.
- Using a mobile phone near the appliance is prohibited.
- Using leak detectors with halogen lamps is prohibited.

3.4 Disposal

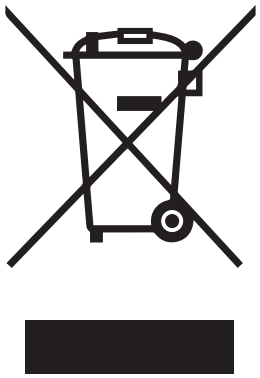

The symbol on the product or packaging indicates that the product must not be treated as normal household waste, but must be taken to the appropriate collection point for recycling of used electrical and electronic equipment and batteries.
Proper disposal of this product avoids harm to humans and the environment and promotes the reuse of valuable raw materials.
For more detailed information about the recycling of this product, contact your local authority, your household waste disposal service or the shop where you purchased the product.

Illegal disposal of the product by the user involves the application of the administrative sanctions provided for by the regulations in force.
This provision is valid in the EU Member States.

⚠ Avoid disassembling the unit yourself.

⚠ This unit contains fluorinated greenhouse gases covered by the Kyoto Protocol. Maintenance and disposal operations must be carried out by qualified personnel only.

⚠ **Contact an Authorized Service Center to disassemble the appliance.**

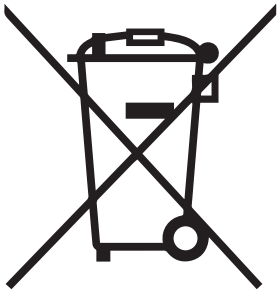

This symbol might be used in combination with a chemical symbol.
In this case, it complies with the requirement set by the Directive for the chemical involved.

4. INFORMATION ABOUT R32 REFRIGERANT

This section contains information and safety warnings specific to the use of the refrigerant R32.

⚠ For more comprehensive information, please read the safety data sheet for the refrigerant used.

⚠ The refrigerant used inside this unit is highly flammable. A refrigerant leak that is exposed to an external ignition source can create a fire hazard.

Amount of refrigerant loaded at the factory and tonnes of CO_2 equivalent:

Physical characteristics of the refrigerant R32		
Security class (ISO 817)	A2L	
GWP (Global Warning Potential)	675	t CO2 eq, 100yr
LFL Minimum flammability limit	0,307	kg/m^3
BV Burning speed	6,7	cm/s
Normal boiling point	-51,7	°C
Auto-ignition temperature	648	°C

4.1 Pictograms on the product

Symbols are used in some parts of the device:

4.1.1 Related to refrigerant R32

Caution: Highly flammable material

- R32 refrigerant gas is mildly flammable and odourless. Avoid proximity to sources of ignition in continuous operation (open flames, gas appliances, electric stoves, lighted cigarettes, etc.).

Instructions for the Authorised Service Centre

- The Authorised Service Centre must read the instructions carefully before performing any work on the appliance.

4.2 Warnings for Installers and Service Centres

ⓘ The use of flammable refrigerants entails specific safety warnings for certain operations during installation and maintenance.

4.2.1 General warnings

ⓘ **This document contains only some of the warnings related to the refrigerant R32. For more comprehensive information, carefully read the safety data sheet available from the dealer.**

⚠ Each chapter contains specific warnings for the operations it describes. These warnings must be read before starting activities.

⚠ All precautions concerning the treatment of the refrigerant must be observed following the regulations in force.

⚠ When installing the air conditioner, it is mandatory to take appropriate antistatic measures, such as wearing antistatic clothing and/or gloves.

⚠ The unit uses environmentally friendly R32 refrigerant gas, with a Global Warming Potential (GWP) = 675. Do not release R32 gas into the atmosphere.

⚠ R32 refrigerant gas is mildly flammable and odourless.

⚠ Do not place flammable objects (spray cans) within 1 metre of the air outlet.

⚠ Avoid proximity to sources of ignition in continuous operation (open flames, gas appliances, electric stoves, lighted cigarettes, etc.).

⚠ If refrigerant gas escapes, ventilate the room abundantly and leave. Call the Authorised Service Centre or professionally qualified personnel as soon as possible and do not intervene on the appliance yourself.

4.2.2 Specific safety rules for R32

ⓘ **This document contains only some of the safety rules related to refrigerant R32. For more comprehensive information, carefully read the safety data sheet available from the dealer.**

⊖ Smoking in the vicinity of the appliance is prohibited.

⊖ Using a mobile phone near the appliance is prohibited.

⊖ Using leak detectors with halogen lamps is prohibited.

4.3 Security audits and procedures

Before starting work, carry out appropriate safety checks to ensure that ignition risks are minimal.

It is recommended that the following precautions be taken before starting an operation:

4.3.1 Operating environment security

Preliminary checks in the work area

Perform the following checks:

- carry out safety checks to ensure that the risk of combustion is minimised
- avoid working in confined spaces
- delimiting the area around the workspace
- ensure safe working conditions around the area by checking that no flammable material is present

Checking for the presence of refrigerant

Perform the following checks:

- the area must be checked with an appropriate refrigerant detector before and during the intervention, so that the technician is aware of potentially flammable atmospheres
- check that the leak detection equipment is suitable for use with flammable refrigerants (does not generate sparks and is adequately sealed or intrinsically safe)
- verify that it is positioned in a suitable space to check for leaks in a timely manner in relation to the maintenance activity carried out

⛔ Using leak detectors with halogen lamps is prohibited.

⚠ Please note that refrigerant R32 is heavier than air.

Absence of ignition sources

When operations to be carried out on a refrigeration system involve the exposure of pipes that contain or have contained a flammable refrigerant.

Perform the following checks:

- all possible sources of ignition, including cigarette smoke, must be kept at a sufficient distance from the site of installation, repair, dismantling and disposal, as flammable coolant could escape into the surrounding space during these operations
- before commencing work, the area around the unit must be inspected for ignition or flammability hazards

⚠ It is forbidden to use any source of ignition that may generate a risk of fire or explosion.

⚠ Smoking is prohibited in the vicinity of the unit. Signs "NO SMOKING" shall be posted.

⚠ It is forbidden to use a mobile phone in the vicinity of the unit.

Presence of fire extinguishers

When performing hot work on refrigeration equipment or associated components:

- keep a suitable fire extinguisher at hand
- set up a dry powder or CO_2 in the vicinity of the work area

Area ventilation

Before working on the system or performing hot work.

Perform the following checks:

- that the area is open or adequately ventilated
- that the ventilation is constant throughout the entire operation and is capable of safely dispersing all released refrigerant and, preferably, venting it outside to the atmosphere

4.3.2 Safety on the refrigeration circuit and refrigerant

Refrigeration circuit checks

Perform the following checks:

- if an electrical component is replaced, the new one must be suitable for its intended use and comply with the correct specifications
- follow the manufacturer's maintenance and service instructions under all circumstances
- in case of doubt, please consult the manufacturer's technical department
- the charge volume must be suitable for the cubic capacity of the room and the intended use in which the components containing the refrigerant are installed, see installation requirements in EN 378
- ventilation devices and openings must open properly and be free of obstructions
- if an indirect refrigerant circuit is used, the presence of refrigerant in the secondary circuits must be checked
- equipment markings must remain visible and legible
- markings and indications that become illegible shall be corrected
- pipes or other components of the refrigerant circuit must be installed in positions that make it unlikely that they will be exposed to substances potentially corrosive to the components containing the refrigerant, unless they are made of materials that are intrinsically corrosion-resistant or adequately protected against corrosion

Detection of flammable refrigerants

⚠ The use of potential ignition sources for searching for or detecting refrigerant leaks is prohibited under any circumstances.

⚠ The use of halogen torches or other open flame detection systems is not permitted.

Leak detection methods

Note that:

- electronic leak detectors can be used to detect flammable refrigerants, but their sensitivity may not be adequate or require a recalibration
- detection equipment must be calibrated in a coolant-free area
- the detector is not a potential source of ignition and is suitable for the refrigerant
- leak detection equipment must be configured to a percentage of the lower flammable limit (LFL) of the refrigerant and be calibrated for the refrigerant used with confirmation of the appropriate gas percentage (max. 25%)
- leak detection fluids are suitable for use with most refrigerants, but the use of chlorine-containing clean-

ers should be avoided, as chlorine can react with the refrigerant and corrode copper tubing

In the event of a refrigerant leak:

- remove or extinguish all open flames
- if brazing is necessary, all refrigerant must be extracted from the system, or isolated (by means of shut-off valves) in a part of the system away from the leak
- purge the system with oxygen-free nitrogen (OFN) both before and during brazing

Removal and evacuation

Observe the following procedure:

► remove the refrigerant
► purge the circuit with inert gas
► evacuate
► purge again with inert gas
► open the circuit by cutting or brazing

Note that:

- the refrigerant charge can be recovered in special cylinders
- the system must be purged with oxygen-free nitrogen to secure the unit
- it may be necessary to repeat this procedure several times
- compressed air or oxygen must not be used for this operation
- purging can be performed by introducing oxygen-free nitrogen into the system under vacuum and continuing to fill until operating pressure is reached, then venting to atmosphere and recreating the vacuum
- this procedure must be repeated until the refrigerant is completely expelled from the system

When introducing the last charge of OFN:

- the system must be vented to atmospheric pressure to allow work to be carried out

ⓘ **This operation is absolutely essential if brazing operations are to be performed on the pipe.**

- make sure that the vacuum pump outlet is not located near any source of ignition and that there is adequate ventilation

Charging procedures

Note that:

- contamination between different refrigerants must be avoided when using charging equipment
- cylinders must be kept upright
- before loading the refrigerant into the system, the system has been properly grounded
- the system must be labelled after loading (if the label is not already present)
- extreme care must be taken to avoid overfilling or underfilling of the system
- before recharging the system, the pressure must be tested with oxygen-free nitrogen
- at the end of charging, but before commissioning, the system is not leaking
- an additional check for leaks must be carried out before leaving the site

Decommissioning

Note that:

- before carrying out this procedure, it is essential that the technician is fully familiar with the equipment and all its components
- all refrigerants must be recovered using safe procedures
- an oil and coolant sample must be taken before proceeding
- before reusing the recovered refrigerant, it is necessary to subject it to an analysis if necessary
- before starting the procedure it is essential to check the availability of the power supply
- electrically isolating the system

Before proceeding, check that:

- mechanical equipment for handling refrigerant cylinders is available, if required
- the necessary personal protective equipment is available and used
- the recovery process is carried out under the constant supervision of a competent person
- the recovery equipment and cylinders comply with current standards

To proceed to recovery:

- if possible, transfer the refrigerant into the unit using a "pump-down"
- if it is not possible to create a vacuum, use a manifold that allows refrigerant to be expelled from various parts of the system
- place the cylinder on the scale
- start the recovery device and use it according to the manufacturer's instructions
- avoid overfilling cylinders. (Do not exceed 80% of the liquid volume)
- do not exceed the maximum working pressure of the cylinder, even temporarily
- after filling the cylinders correctly and completing the procedure, transfer the cylinders and equipment from the site as soon as possible and close all valves equipment isolation valves
- before loading the recovered refrigerant into another refrigeration system, it must be cleaned and checked

Recovery

When draining the refrigerant from a system for maintenance or decommissioning reasons.

Make sure that:

- the refrigerant is safely extracted
- only cylinders suitable for refrigerant recovery are used
- the number of cylinders required to contain the entire system charge is available
- all cylinders to be used are designed for the refrigerant recovered and labelled for that refrigerant (special cylinders for refrigerant recovery)
- the cylinders are fitted with a safety valve and well-functioning shut-off valves
- empty recovery cylinders are evacuated and, if possible, cooled prior to recovery
- the recovery equipment is in good working order, accompanied by a set of instructions at hand, and must be suitable for the recovery of flammable refrigerants
- a set of well-functioning calibrated scales is provided
- the pipes are complete with decoupling fittings free of leaks and in good condition
- the recovery equipment is in good working order, has been properly maintained and that the associat-

ed electrical components are sealed to prevent ignition hazards in the event of refrigerant leakage. If in doubt, consult the manufacturer
- the refrigerant is returned to the supplier in the correct recovery cylinders, accompanied by the relevant waste identification form
- no mixing of different types of refrigerant in recovery units, particularly in cylinders
- if compressors or compressor oils are decommissioned, evacuate them to an acceptable level to avoid flammable refrigerant remaining inside the lubricant
- the evacuation procedure is carried out before returning the compressor to the suppliers
- only electrical heating on the compressor housing is used to accelerate this process
- when oil is extracted from the system it is downloaded using a safe procedure

Labelling

Note that:
- the appliance must be labelled to indicate that it has been decommissioned and emptied of refrigerant
- the label must be dated and signed
- check that labels indicating the flammable refrigerant content are attached to the appliance

4.3.3 Electrical and electronic safety

Checks on electrical devices

Note that:
- repair and maintenance procedures for electrical components must include initial safety checks and component inspection procedures
- if a defect is found that may pose a safety risk, the power supply to the circuit must be interrupted until the problem is satisfactorily resolved
- if the problem cannot be solved immediately but it is necessary to keep the system running, a suitable temporary solution must be adopted
- the situation must be communicated to the owner of the unit so that all persons concerned can be duly informed

Perform the following checks:
- check that capacitors are discharged: this procedure must be performed safely to avoid the possibility of sparks
- check that no live components or wires are exposed during charging, resetting or venting of the system
- check for grounding interruptions
- check that the unit is not electrically powered and if necessary disconnect the power supply before proceeding with the next steps

Wiring

Make sure that:
- the wiring harness is not exposed to wear, corrosion, excessive pressure, vibration, sharp edges or other adverse environmental influences

ⓘ **The inspection must also take into account the effects of ageing or continuous vibration from compressors, fans or other similar sources.**

4.3.4 Component safety

Repair of sealed components

Note that:
- it is necessary to disconnect all electrical consumers from the equipment before removing the sealing covers, etc.
- if it is absolutely necessary to have a power supply during the intervention, a leak detection method must be set up at the most critical point with permanent operation that can signal potentially dangerous situations
- the use of silicone-based sealants may render certain types of leak detection equipment less effective

Make sure that:
- the enclosure does not undergo any alterations that would compromise the required level of protection, including damage to cables, an excessive number of connections, the use of terminals that do not comply with the original specifications, damage to seals, incorrect assembly of glands, etc.
- the unit is securely mounted
- the seals or sealing materials have not deteriorated to such an extent that they no longer guarantee a perfect seal against the ingress of flammable atmospheres
- spare parts must comply with the manufacturer's specifications

Repair of intrinsically safe components

Note that:
- before applying capacitance or permanent inductance loads to the circuit, it is necessary to check that this operation does not cause the permissible voltage and current values for the device in use to be exceeded
- intrinsically safe components are the only types of components on which it is possible to work under voltage in the presence of a flammable atmosphere
- the test apparatus must have the correct nominal characteristics
- only use parts specified by the manufacturer when replacing components
- other components can cause ignition of the refrigerant released into the atmosphere

⊖ Using leak detectors with halogen lamps is prohibited.

4.3.5 Safety in handling, receiving, and storing units

During transport and storage of the unit, take all necessary measures to prevent the risk of fire caused by any leaks of R32 refrigerant gas.

Working Procedure

Work must be carried out according to a controlled procedure so as to minimise the risk of flammable gases or vapours being present during the work.

Reception and handling

Upon receipt of the unit:

- check whether there is refrigerant inside the package using an electronic leak detector suitable for the refrigerant in the system
- if present, it is likely that the refrigeration circuit is damaged
- in this case the unit must not be installed and you must call the Service Department

Transport, marking, storage and disposal of units

- adhere to national standards

4.4 Security area

⚠ The installation of the unit does not have any special requirements (such as minimum area, room ventilation requirements or sensors) in relation to the use of refrigerants as the quantity used is less than 1.224 kg.

5. PRODUCT PRESENTATION

5.1 Identification

The appliance can be identified by the rating plate:

Technical rating plate

⚠ According to EU Regulation No. 517/2014 concerning certain fluorinated greenhouse gases, it is mandatory to indicate the total amount of refrigerant present in the installed system. This information can be found on the rating plate of the unit.

⚠ Tampering with, removal of, or lack of identification plates will not allow for the safe identification of the product by its serial number and therefore invalidates the warranty.

1. Technical rating plate

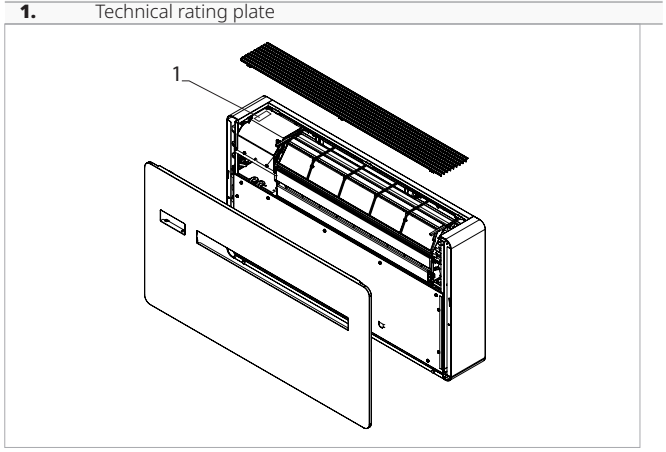

5.2 Destination of use

These appliances have been designed for conditioning and/or heating rooms and they must be destined solely for this purpose, in accordance with their performance characteristics.

⛔ It is forbidden to use the device other than as indicated.

5.3 Description of the appliance

The **..2.0 12 HP AUSTRALIA** air conditioners without an external unit are designed for indoor installation on a pe-rimeter wall at the top or bottom, in a vertical position. Inverter technology allows you to optimise the power for maximum comfort. The Dual Power function allows the required temperature to be reached in the shortest possible time (Inverter models only). Control is via a touch panel located on the unit or via a remote control.
The appliance uses the refrigerant R32.

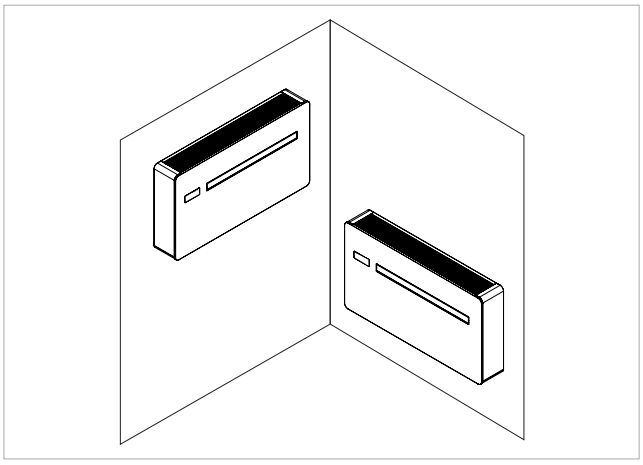

5.4 Components

1.	Control Panel
2.	Air outlet deflector
3.	Aesthetic front panel
4.	Intake grille
5.	Aesthetic side panel
6.	External air intake
7.	External air expulsion
8.	Condensate drain
9.	Anti-lifting bracket
10.	Remote control
11.	Terminal block
12.	Air filter
13.	Room air probe
14.	Internal exchanger
15.	External fan
16.	Condensation pump
17.	External exchanger
18.	Maximum level float
19.	Level float
20.	Condensation drain valve
21.	Four-way valve
22.	Compressor
23.	External air probe

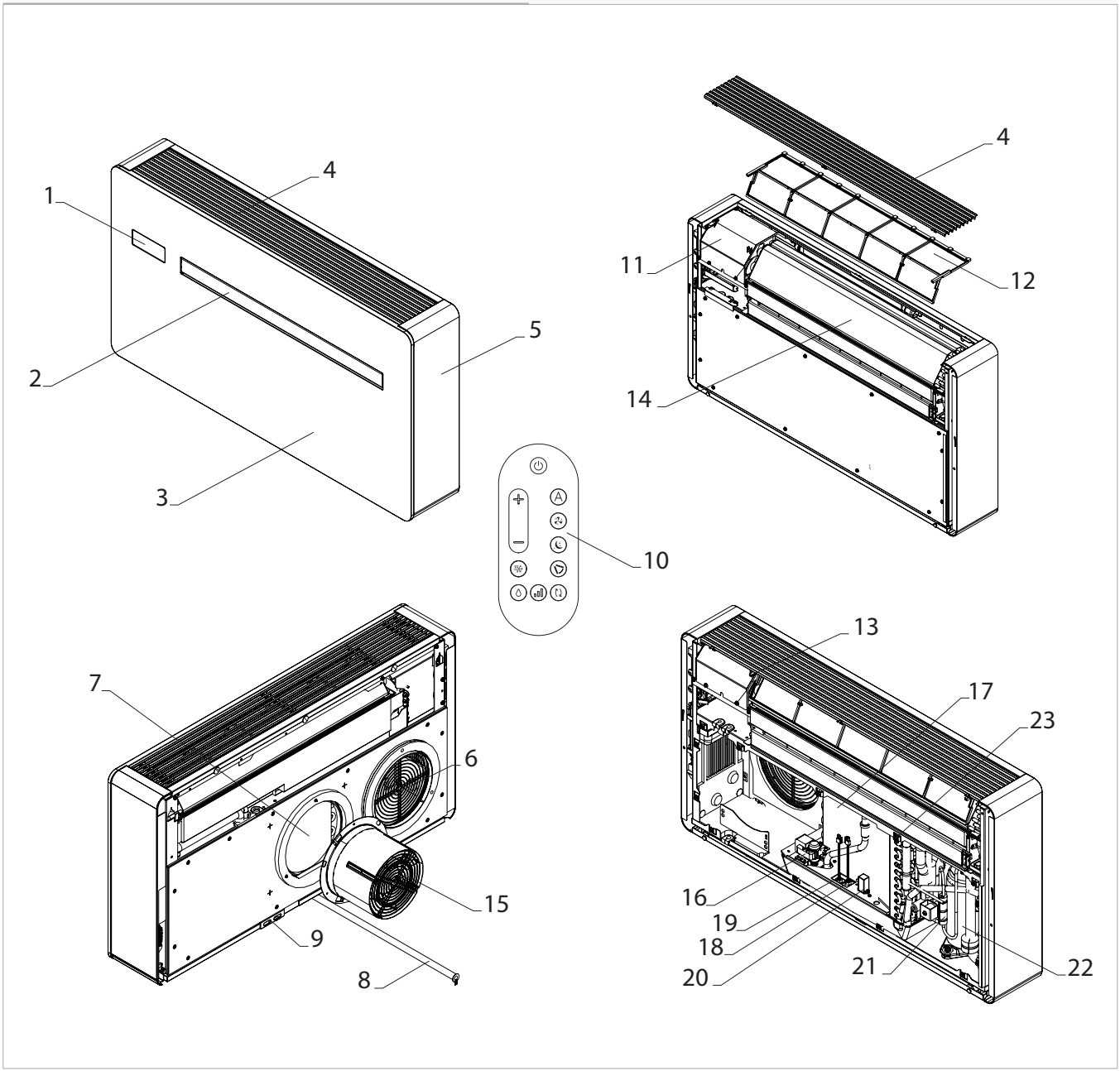

5.5 Compatible accessories

⚠ The accessories table refers to all products in the ..2.0 range. Please check the column Combinable products for correspondence with the purchased size.

	Accessory description	Combinable products	Code
Wall mounted control panels M7 series			
Control panels			
	LED electronic control panel with touch interface, wall-mounted complete with thermostat and room temperature and relative humidity probe. Cable connection. Dimensions (lxhxp): 117x80x5 mm. Colour white	All	**EEB749II**
	LED electronic control panel with touch interface, wall-mounted complete with thermostat and room temperature and relative humidity probe with integrated Wi-Fi module, new App. Cable connection. Dimensions (lxhxp): 117x80x5 mm. Colour white	All	**EFB749II**
Built-in boxes			
	Built-in box for masonry	All	**N000557A**
	Built-in plasterboard box	All	**N000558A**
ERV module			
Cover kit			
	Bottom cover kit	..2.0 - 12 HP DC INVERTER ..2.0 - 10 HP DC INVERTER ..2.0 15 HP DC INVERTER - MAXI ..2.0 ELEC 2 kW - 12 HP DC INVERTER ..2.0 ELEC 2 kW - 15 HP DC INVERTER ..2.0 - 12 HP AUSTRALIA	**GB0744II**
Accessories supplied separately			
Bottom cover kit			
	Aesthetic kit lower side cover	..2.0 - 12 HP DC INVERTER ..2.0 - 10 HP DC INVERTER ..2.0 15 HP DC INVERTER - MAXI ..2.0 ELEC 2 kW - 12 HP DC INVERTER ..2.0 ELEC 2 kW - 15 HP DC INVERTER ..2.0 - 12 HP AUSTRALIA	**GB0737II**
		..2.0 09 HP DC INVERTER - MINI ..2.0 09 HP DC INVERTER - MINI FREDDO FREDDO	**GB1105II**
Grille and other accessories			
	Rectangular Single Grille DN 160	..2.0 - 12 HP DC INVERTER ..2.0 - 10 HP DC INVERTER ..2.0 09 HP DC INVERTER - MINI ..2.0 09 HP DC INVERTER - MINI FREDDO FREDDO ..2.0 ELEC 2 kW - 12 HP DC INVERTER	**GB0758II**
	Rectangular Single Grille DN 200	..2.0 15 HP DC INVERTER - MAXI ..2.0 ELEC 2 kW - 15 HP DC INVERTER	**GB0759II**
	Rain protection DN 160	..2.0 - 12 HP DC INVERTER ..2.0 - 10 HP DC INVERTER ..2.0 09 HP DC INVERTER - MINI ..2.0 09 HP DC INVERTER - MINI FREDDO FREDDO ..2.0 ELEC 2 kW - 12 HP DC INVERTER	**GB0760II**
	Rain protection DN 200	..2.0 15 HP DC INVERTER - MAXI ..2.0 ELEC 2 kW - 15 HP DC INVERTER	**GB0761II**

	Accessory description	Combinable products	Code
	Foldable grilles DN160	..2.0 - 12 HP DC INVERTER ..2.0 - 10 HP DC INVERTER ..2.0 09 HP DC INVERTER - MINI ..2.0 09 HP DC INVERTER - MINI FREDDO FREDDO	**GB1143II**
	Foldable grilles DN 200	..2.0 15 HP DC INVERTER - MAXI	**GB1144II**
Kit for installation on glass walls			
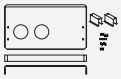	Kit for installation on glass walls. Consisting of: 1 aesthetic back cover, 2 floor fixing bracket, 1 front plinth cover floor fixing brackets, screws and nuts	..2.0 - 12 HP DC INVERTER ..2.0 - 10 HP DC INVERTER ..2.0 ELEC 2 kW - 12 HP DC INVERTER	**GB0740II**
Side exit formwork			
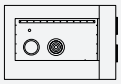	Recessed casing for corner installation with right-side outlet. Dimensions (WxHxD): 1008x506x165 mm	..2.0 - 12 HP DC INVERTER ..2.0 - 10 HP DC INVERTER ..2.0 ELEC 2 kW - 12 HP DC INVERTER	**L00773II**
	Recessed casing for corner installation with left-side outlet. Dimensions (WxHxD): 1008x506x165 mm	..2.0 - 12 HP DC INVERTER ..2.0 - 10 HP DC INVERTER ..2.0 ELEC 2 kW - 12 HP DC INVERTER	**L00774II**
	Flush-mounted formwork for corner installation with right-hand outlet.	..2.0 15 HP DC INVERTER - MAXI	**L01074II**
	Flush-mounted formwork for corner installation with left-hand outlet.	..2.0 15 HP DC INVERTER - MAXI	**L01075II**
Replacement accessories			
	Soundproofing kit 202 mm holes	..2.0 - 12 HP DC INVERTER ..2.0 - 10 HP DC INVERTER ..2.0 09 HP DC INVERTER - MINI ..2.0 09 HP DC INVERTER - MINI FREDDO FREDDO ..2.0 15 HP DC INVERTER - MAXI ..2.0 ELEC 2 kW - 12 HP DC INVERTER ..2.0 ELEC 2 kW - 15 HP DC INVERTER	**GB1145II**
	Spare infrared remote control	..2.0 - 12 HP DC INVERTER ..2.0 - 10 HP DC INVERTER ..2.0 09 HP DC INVERTER - MINI ..2.0 09 HP DC INVERTER - MINI FREDDO FREDDO ..2.0 15 HP DC INVERTER - MAXI ..2.0 ELEC 2 kW - 12 HP DC INVERTER ..2.0 ELEC 2 kW - 15 HP DC INVERTER ..2.0 - 12 HP AUSTRALIA	**GB1146II**

6. INSTALLATION

6.1 Preliminary warnings

⚠ **Please refer to chapter "Information about R32 refrigerant"** *p. 12* **for safety warnings concerning the refrigerant.**

⚠ **This section is dedicated to the Installer. The features of the installer are described in the "Recipients"** *p. 8* **chapter.**

⚠ **For detailed information on the products, refer to chapter "Technical information"** *p. 64***.**

⚠ The installation must be carried out by the installer in accordance with national installation codes. There is a risk of water leakage, electric shock or fire if the installation is not performed correctly.

⚠ During the installation, it is necessary to observe the precautions mentioned in this manual, and on the labels placed inside the equipment, as well as to adopt any precaution suggested by common sense and by the Safety Regulations in force in the place of installation.

⚠ Be sure to use the supplied or specified installation parts. Use of other parts may cause the unit to come loose, leak water, or cause electrical shock, or fire.

⚠ The Manufacturer accepts no liability for damage caused to animals or property due to failure to apply the indicated rules which may cause malfunction of appliances.

⚠ The air conditioners without an external unit are designed for indoor installation. The only components suitable for outdoor use are the external grilles for air inlet and outlet.

6.2 Reception

6.2.1 Preliminary warnings

⚠ On receipt check for any damage and, if any is found, accept the goods with reservation, and keep photographic evidence of any damage found

⚠ The package must be transported in an upright position; otherwise, notify the carrier immediately.

⚠ In the event of damage, notify the shipper within 3 days of receipt of any damage by registered mail with return receipt, submitting photographic evidence. Similar information should be sent by fax to the manufacturer (jurisdiction will be at the Court Trento for any dispute).

⚠ No notice of damage will be accepted after 3 days from delivery.

⚠ Unpack and check the contents of individual components against the packing list.

6.2.2 Package description

The packaging is made of suitable material and carried out by experienced personnel.
All units are checked and tested and are delivered complete and in perfect condition.
The appliance is shipped in standard packaging consisting of a cardboard sleeve and a set of expanded polystyrene protectors.

6.3 Dimensions and weights with packaging

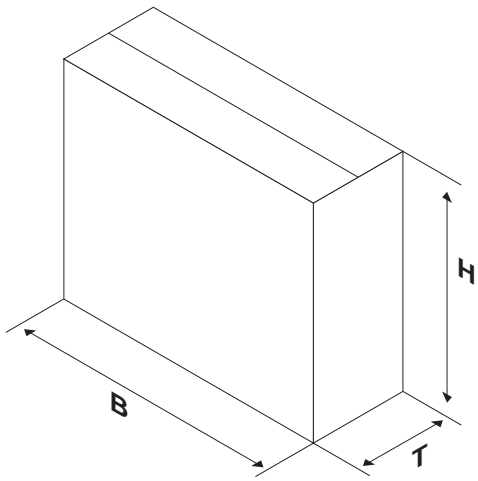

		..2.0 AUSTRALIA
Models	u.m.	12HP DC Inverter
Dimensions and weight for shipping		
Width	mm	110
Height	mm	670
Total depth	mm	255
Weight	kg	45,0

6.4 Handling with packaging

6.4.1 Preliminary warnings

⚠ The appliance must be handled only by qualified personnel, adequately equipped and with equipment suitable for the weight and dimensions of the appliance.

⚠ Stay clear of the area below and around it when the load is lifted off the ground.

⚠ Avoid dangerous situations when using a hoist to lift the appliance.

⚠ The appliance is unbalanced on the right (compressor side)

⚠ During transportation, the unit must be kept in vertical position.

6.4.2 Movement methods

Boxes can either be carried singularly by hand by two operators or loaded on a forklift truck evenly stacked.

⚠ Check the indications on the packaging for the number of packages that may be stacked together.

⚠ In manual operation it is compulsory to always respect the maximum weight per person provided for by the national laws and standards.

⚠ Use the handles provided on the packaging.

A Handles

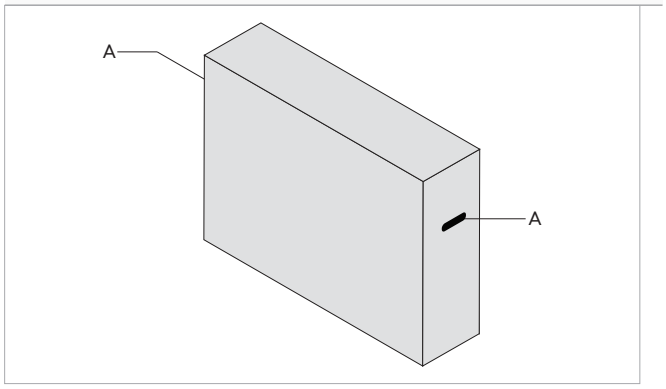

6.5 Storage

6.5.1 Preliminary warnings

⚠ **Please refer to chapter "Information about R32 refrigerant"** *p. 12* **for safety warnings concerning the refrigerant.**

⚠ Store in accordance with the applicable national regulations.

⚠ Store the box in a closed environment protected from atmospheric agents and isolate it from the floor using planks or pallets.

⚠ Do not turn the packaging upside down.

⚠ Only place the appliance in a vertical position.

⚠ Store in a clean and dry place.

6.6 Unpacking

6.6.1 Preliminary warnings

⚠ **Please refer to chapter "Information about R32 refrigerant"** *p. 12* **for safety warnings concerning the refrigerant.**

⚠ Check that no components were damaged during transport.

⚠ Dispose of the packaging components following the applicable waste disposal regulations. Check for disposal arrangements with your municipality.

⚠ Handle with care.

⚠ The equipment must always be handled vertically.

⚠ Check if there is refrigerant inside the package using an electronic leak detector suitable for the system refrigerant. If it is present, the refrigeration circuit is likely damaged. In this case, do not install the appliance and call the Authorised Service Centre.

⊖ The packing material (cardboard, staples, plastic bags, etc.) must not be dispersed or abandoned in the surrounding environment and must be kept out of the reach of children, as it poses a risk of danger.

6.6.2 Remove the package

1. Polystyrene elements

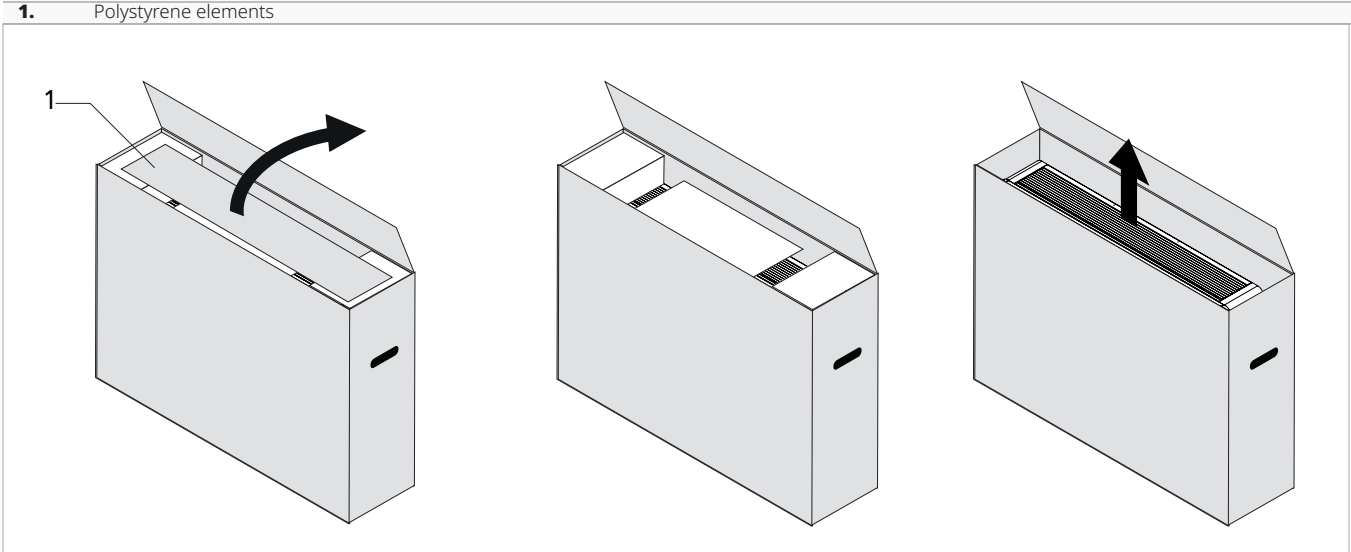

Remove the packing:

- ► open the cardboard packaging
- ► remove the polystyrene elements
- ► remove the accompanying components
- ► remove the appliance from the box

Accompanying material

Inside the packaging are:

- 1 instruction sheet for downloading the manuals
- 1 label for scanning the QR Code
- 1 INNOVA warranty validation label
- 1 Energy efficiency label
- 1 installation template
- 1 wall mounting bracket
- 2 external grids
- 1 Remote control
- Fan soundproofing kit
- 2 Hexagonal screws
- 6 dowels

⚠ Check the presence of the individual components.

In c ase of lost, the installation template is available on the website, in the download area.

6.7 Handling without packaging

6.7.1 Preliminary warnings

⚠ The appliance must be handled only by qualified personnel, adequately equipped and with equipment suitable for the weight and dimensions of the appliance.

6.7.2 Movement methods

Boxes can either be carried singularly by hand by two operators or loaded on a forklift truck evenly stacked.

⚠ Check the indications on the packaging for the number of packages that may be stacked together.

⚠ In manual operation it is compulsory to always respect the maximum weight per person provided for by the national laws and standards.

6.8 Installation site

The location of the appliance must be determined by the plant engineer or a competent person and must take into account both purely technical requirements and any national/local legislation in force.
This appliance is designed for vertical, low-wall or high-wall indoor installation.

⚠ The appliance must be installed against a wall communicating with the outside.

⚠ The appliance is stated as having an IPX0 protection rating, therefore it is not suitable for outdoor installation and in rooms with high levels of humidity (swimming pool rooms, etc.).

⚠ The unit can be installed at a maximum altitude of 2700 m.

6.8.1 Preliminary warnings

⚠ Avoid installing the unit near:
- obstacles or barriers that cause recirculation of the exhaust air
- narrow places where the sound level of the appliance can be enhanced by reverberations or resonances
- environments with the presence of flammable or explosive gases
- very humid environments (laundries, greenhouses, etc.)
- environments with aggressive atmospheres
- solar radiation and proximity to heat sources

⚠ Avoid placing the unit within 1 metre of radio and video equipment.

⚠ Do not install over heat sources.

⚠ Make sure that:
- the installation site of the unit must be chosen with the utmost care to guarantee adequate protection from shocks and consequent damage
- the supporting structure is able to support the weight of the appliance
- the support surface does not affect load-bearing elements of the building, pipes, or electrical lines
- there are no obstacles to the free circulation of air through the holes (plants, leaves...)
- the appliance must be installed in a position where it can be easily serviced
- the safety distances between the units and other appliances or structures are scrupulously respected so that the air entering and leaving the fans is free to circulate

⚠ If the appliance is installed incorrectly or on an unsuitable surface, it could cause damage to people or property if it detaches from its base.

⚠ The unit should not be installed in a position where the air flow is aimed directly at the people nearby.

⚠ Provide the following:
- a nearby drain for the outflow of condensate
- a compliant power supply nearby
- fasteners suitable for the support surface used

Preliminary warnings for R32

⚠ Please refer to chapter "Information about R32 refrigerant" *p. 12* for safety warnings concerning the refrigerant.

⚠ The installation of the unit does not have any special requirements (such as minimum area, room ventilation requirements or sensors) in relation to the use of refrigerants as the quantity used is less than 1.224 kg.

6.9 Installation mode

⚠ For ideal installation and performance levels, carefully follow the instructions in the manual.

⚠ Failure to do so may cause system malfunctions and automatically voids the warranty, and relieves the manufacturer of any harm caused to person, animals or property.

6.10 Installation minimum distances

The clearance zones for the installation and maintenance of the appliance are shown in the figure. Established spaces are necessary to avoid barriers to airflow and allow for normal cleaning and maintenance.

⚠ Make sure that there is sufficient space to allow the panels to be removed for routine and supplementary maintenance operations.

A	High wall installation
B	Low wall installation

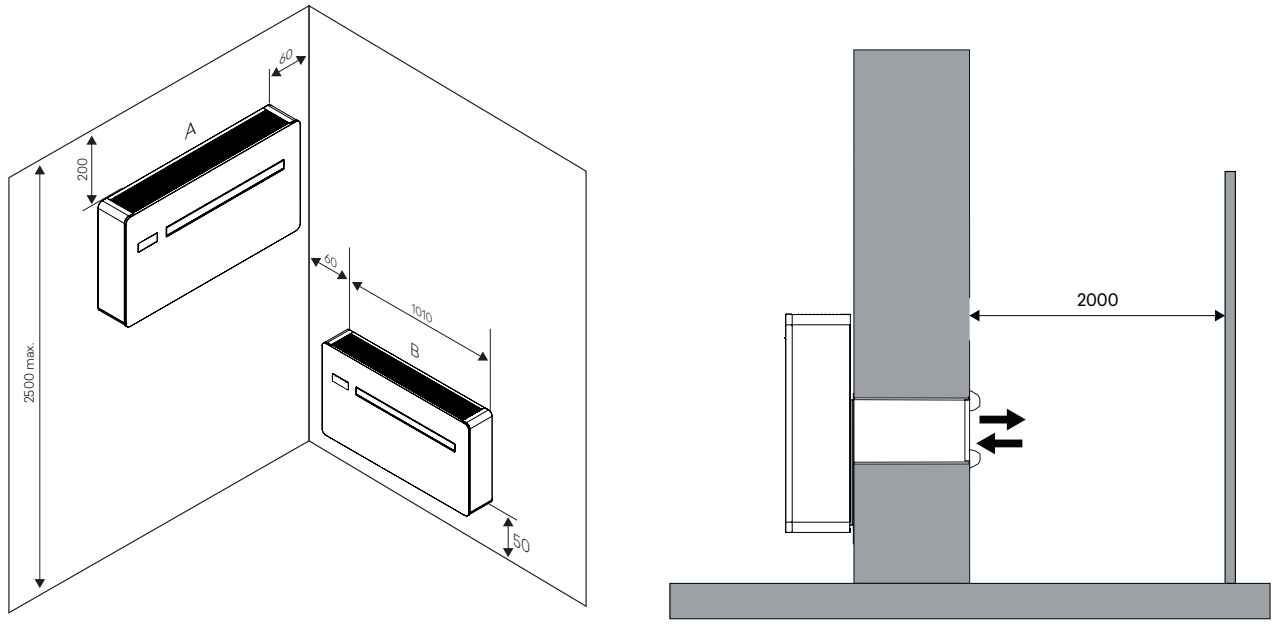

6.11 Positioning

The units can be wall-mounted upwards or downwards.
The units are supplied with a paper template for marking the holes necessary for installation.

⚠ Hold the template in the correct position with tape.

A	Holes for fastening wall bracket	**D**	ø 18 mm condensate drain
B	Electrical connection area	**E**	Anti-lifting bracket hole
C	8'' holes for air vent pipes		

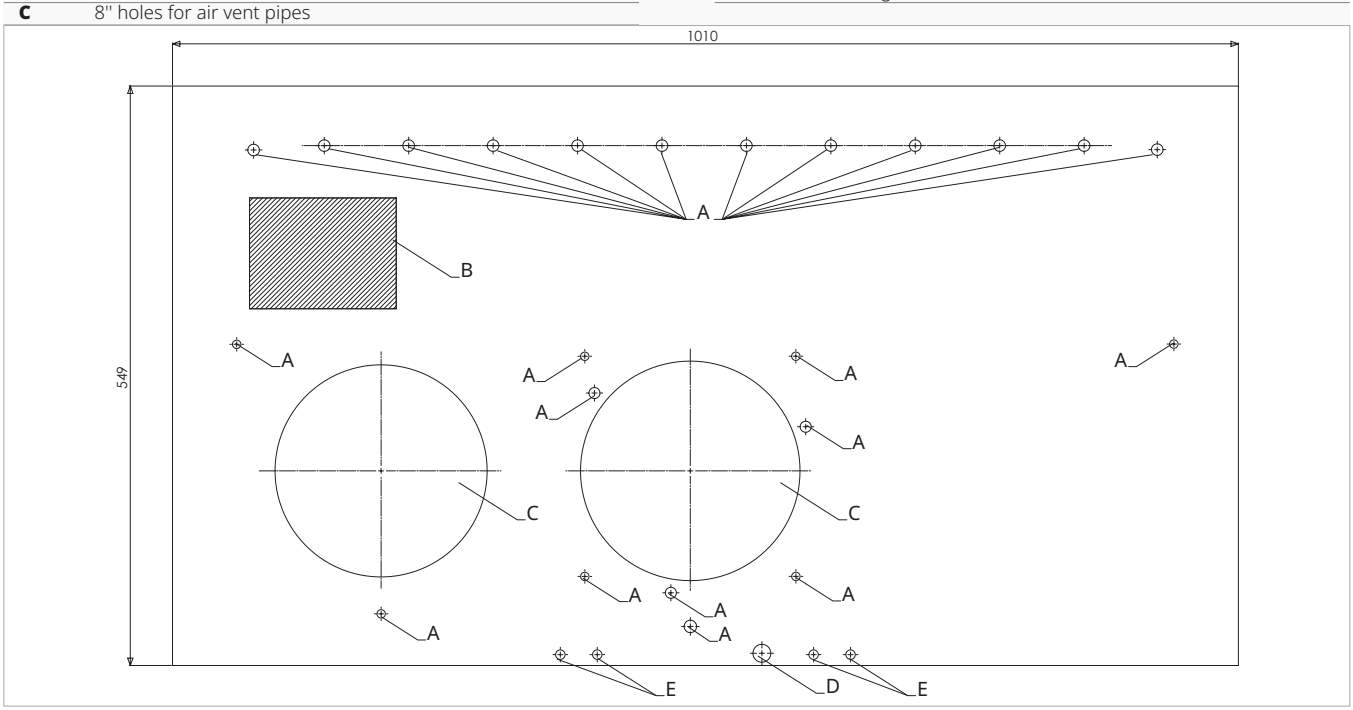

6.11.1 Preliminary warnings

⚠ The unit requires two or more people to position the unit.

⚠ The wall mounting bracket supplied as an accessory is required to position the unit on the wall.

⚠ Ensure that:
- the support surface is capable of supporting the weight of the appliance
- the support surface does not affect load-bearing elements of the building, pipes, or electrical lines
- the functionality of load-bearing elements is not compromised

6.11.2 Installation arrangement

Wall drilling for ducts

A	Side of the wall towards the interior
B	Side of the wall towards the exterior
1.	Perimeter wall
2.	Unit
3.	Return and expulsion grilles
4.	Outside air ducts

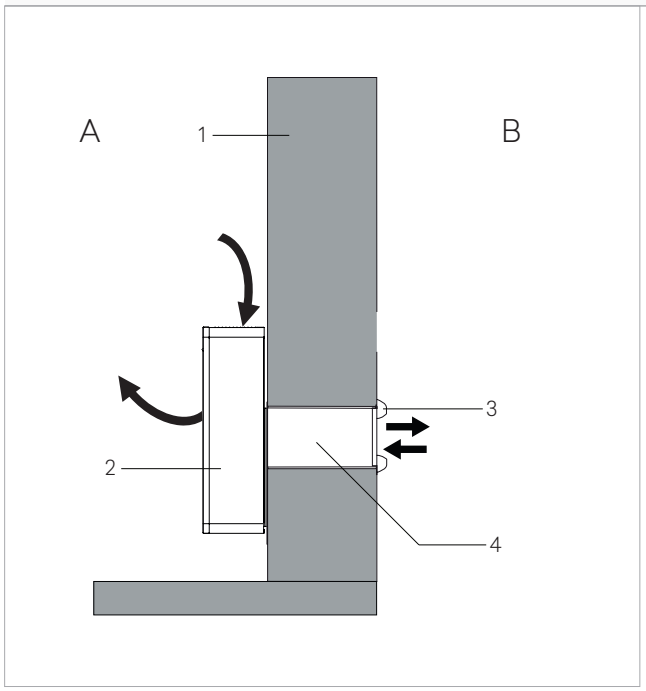

► position the paper template
► mark the positions of the holes for the ducts
► use a drill
► drill a pilot hole

- ► use a core drill
- ► drill the through hole into the wall

⚠ The maximum length of the holes is 1 meter.

⛔ Curves are prohibited.

⚠ To prevent the creation of large quantities of dust and debris in the room it is recommended to couple the core drill to a vacuum system.

⚠ Proceed with caution in the vicinity of the outer wall in order to avoid the breakage of plaster around the hole.

⚠ Take precautions so that the drilled material does not fall on persons and objects below.

Fixing the bracket

The devices are provided with metallic support for mounting on the wall.

1.	Spirit level
2.	Metal support
3.	Fixing screw
4.	Support wall
5.	Expansion plug

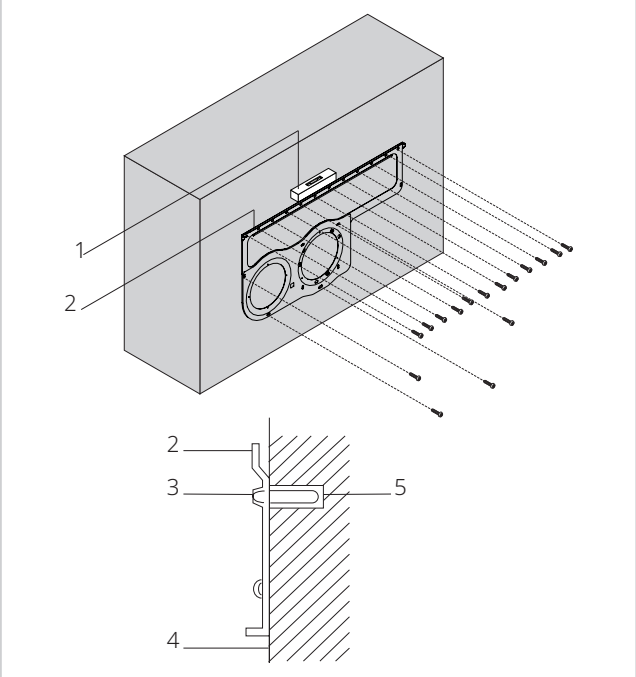

- ► use the paper template
- ► mark the positions of the fixing holes
- ► use a drill
- ► drill holes at the marked positions
- ► fix the metallic support with the screws and the wall plugs

⚠ Place the metallic support on a level surface that is capable of supporting its weight.

⚠ Check that the installation is horizontal using a water level.

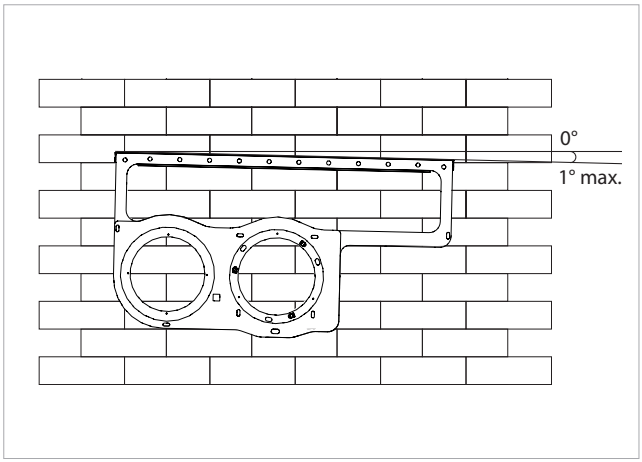

⚠ A maximum inclination of 1° towards the right side of the appliance is allowed to facilitate the drainage of condensate.

Positioning of the fan on the external side

1.	Fan
2.	Wall mounting bracket

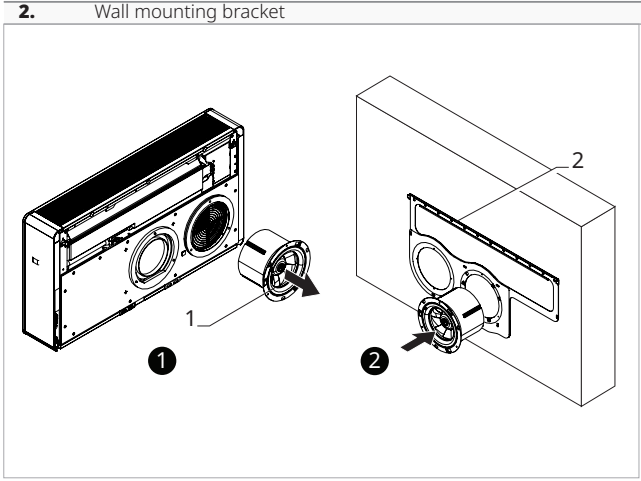

- ► extract the external side fan from the unit
- ► position the external side fan on the external air exhaust fitting

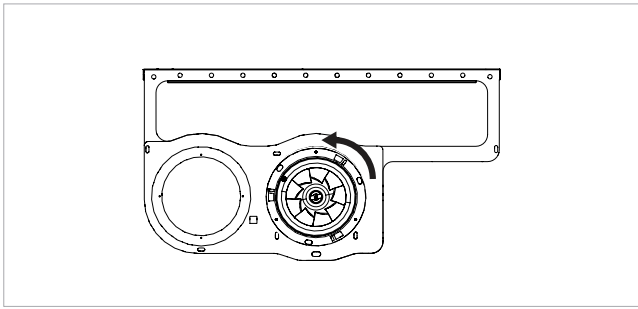

- ► rotate the external side fan counterclockwise until it locks

⚠ For the electrical connection of the external side fan, refer to chapter "External Side Fan Connection" *p. 32*.

Positioning of the soundproofing material

⚠ If you wish to soundproof the fan, follow the indicated procedure.

1.	Fan	**3.**	Soundproofing material
2.	Conveyor	**4.**	Fixing bracket

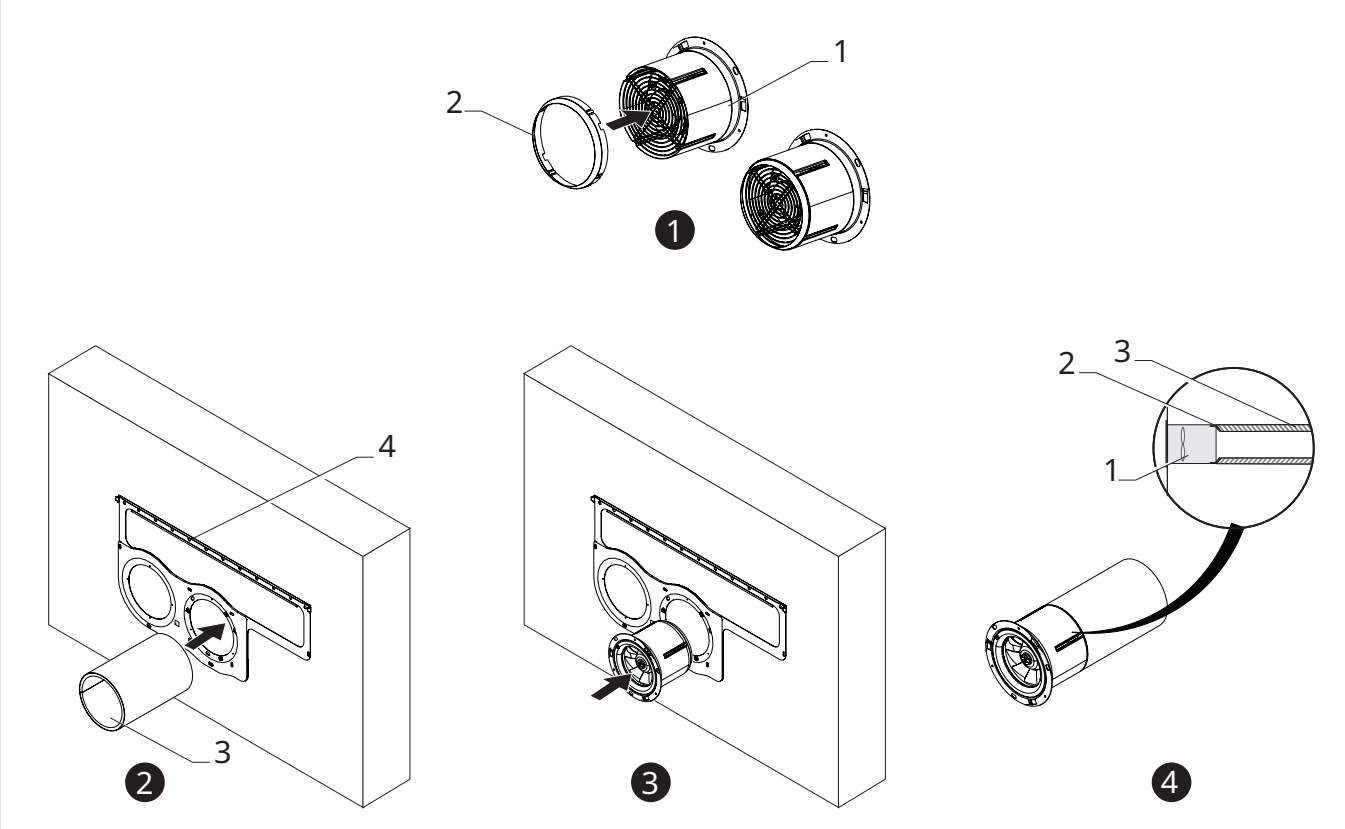

To Soundproof the Fan:

- ► secure the conveyor to the fan
- ► cut the soundproofing material to the desired length, based on the wall depth
- ► insert the soundproofing material into the hole
- ► insert the soundproofing material into the hole
- ► Check that the soundproofing material is in good contact with the conveyor.
- ► proceed with the unit installation; see section "Positioning" *p. 28*

6.11.3 Positioning

1.	Mounting Brackets
2.	Fixing bracket
3.	..2.0 AMERICA

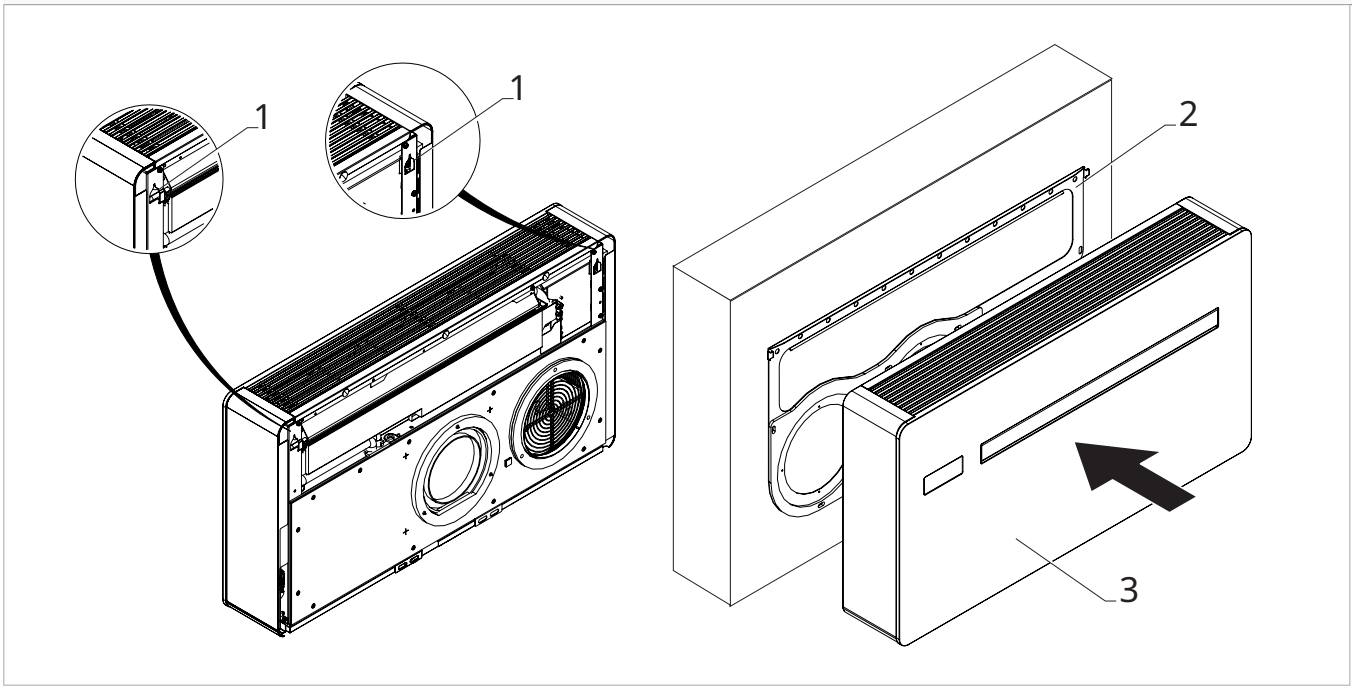

- ► fasten the unit to the upper part of the metallic support
- ► verify the correct hooking to the interlocking points

⚠ To facilitate connections, a spacer can be used to keep the bottom of the unit away from the wall.

6.12 Condensation drain preparation

This appliance is complete with a tray for collecting the condensation produced during heating, cooling and dehumidification operation.
The size and positioning of the drainage tube are shown below.

In heating operation, condensation should be conveyed to a appropriate place by providing a condensate drain.

In cooling or dehumidification operation, the unit has a system for self-disposal of condensation.
In these modes of operation, an external condensate drain does not need to be provided.
In cooling or dehumidification function, in extreme operating condition (high temperature and high humidity) the unit may not be able to automatically dispose of the produced condensate, in this case the display will show OF.
Refer to the "Maximum condensate collection level warning" *p. 62* section for more details.

6.12.1 Preliminary warnings

⚠ If the line flows into a container (e.g. a tank), do not close the container hermetically and avoid immersing the draining pipe into the water.

⚠ The hole for the condensation pipe must always slope towards the outside.

⚠ The exact position in which to place the pipe mouth is indicated on the template.

⚠ Check that the expelled water does not cause any damage or problems to people or objects. During winter, this water may create sheets of ice outside.

⚠ When connecting the condensation drain, be careful not to squeeze the rubber duct.

⚠ It is possible to empty the collection tray using the safety drain at the base of the appliance if necessary.

⚠ If you do not want to prepare an external drainage pipe in "cold only" mode, it is advisable to close the condensate drain with a plug.

6.12.2 Positioning

1.	Condensation drain connection (black plug)
2.	Condensate drainage pipe (supplied as standard)

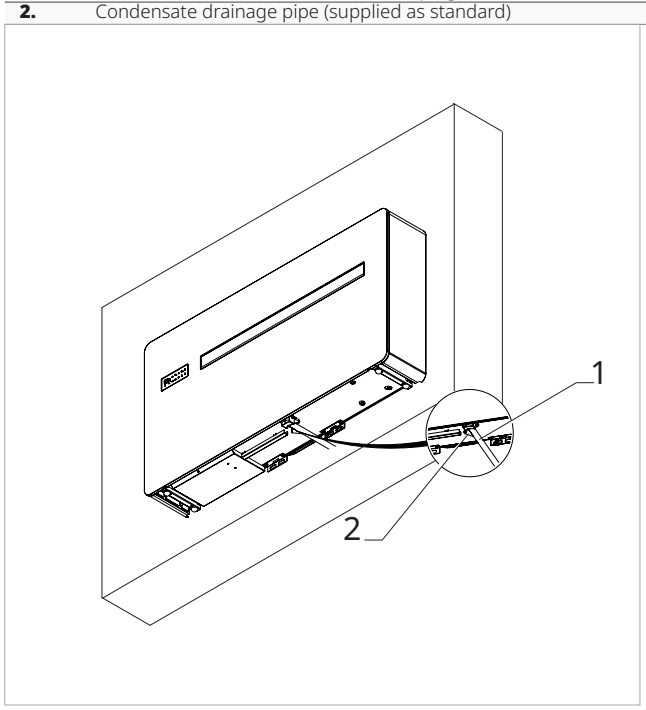

The device is factory supplied with a stub pipe connected to the condensation drain connection. If it is not enough:
- ► remove the nozzle from the discharge connection
- ► connect a drainage pipe of greater length not supplied
- ► keep a minimum slope of 3% towards the drain location
- ► insulate fitting points

⚠ Use plastic drainage pipes.

⚠ Avoid pipes made of metallic material.

⚠ Make sure all joints are sealed to prevent leakage of water.

⚠ Condensate drainage pipes must be insulated for both indoor and outdoor sections of the house to avoid condensation on the surface and/or freezing problems.

⚠ It is possible to empty the collection tray using the safety drain at the base of the appliance if necessary.

If using a tank for collecting the condensation:

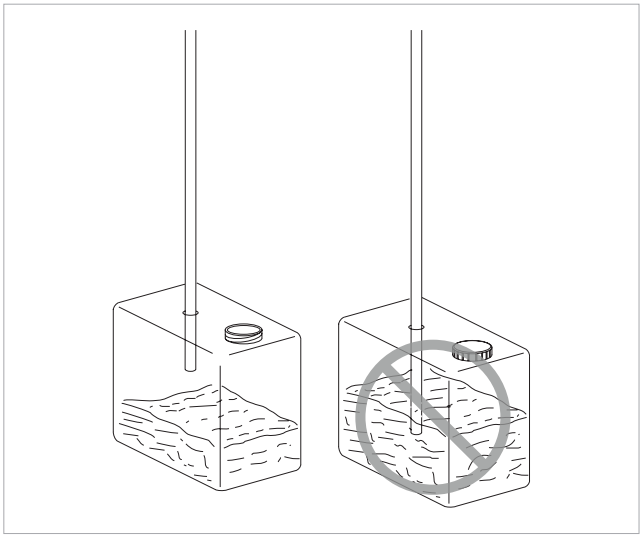

⚠ Avoid the hermetic closure of the container.

⚠ Prevent the end of the drainage tube from falling below the water level.

If draining into the sewage system:

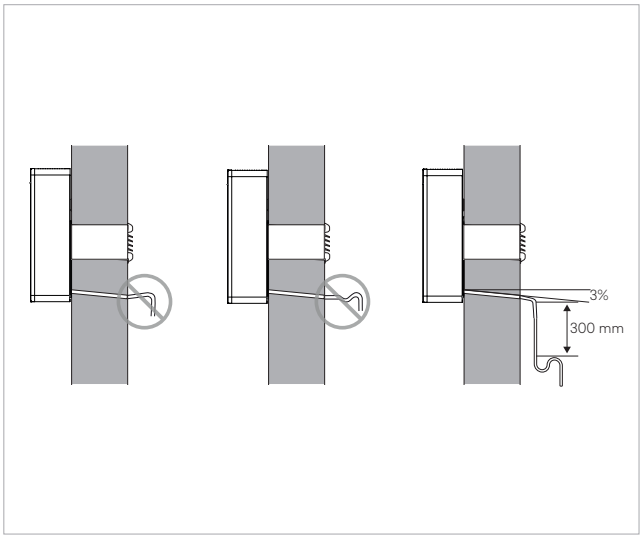

⚠ The discharge system must feature a suitable syphon in order to prevent air from entering the vacuum system. The syphon also prevents odours and insects from entering the system.

⚠ The trap must feature a plug in its lower part or must otherwise allow for quick disassembly for cleaning purposes.

If using an open drain:

⚠ If the condensation is not collected, it will be deposited on the support surface. The water could freeze if the outdoor temperatures are below zero, thus creating a hazard. In this case, appropriate barriers should be installed in order to prevent people from approaching the area.

6.12.3 Condensate drain pipe insulation

In case of condensate drain pipe use, the pipe must be coated with anti-condensation insulation for the internal part of the building and the wall.

⚠ The insulation must be fitted until the condensate drain pipe is plugged into the connection provided on the unit.

6.13 Electric connections

6.13.1 Preliminary warnings

⚠ **Please refer to chapter "Information about R32 refrigerant"** *p. 12* **for safety warnings concerning the refrigerant.**

⚠ All operations of an electrical nature must be carried out by qualified personnel having the necessary training, who understands the legal requirements, and is informed about the risks related to such operations.

⚠ All connections must be made following the regulations in force in the country of installation.

⚠ Before carrying out any work, make sure that the power supply is switched off.

⚠ References:

- refer to the wiring diagrams in this manual for the electrical connections, especially the part concerning the power supply terminal block

⚠ Before connecting the conditioner check that:
- the power supply voltage and frequency values comply with the data plate of the appliance.
- the line has a suitable earth connection and that it is sized for the maximum absorption of the conditioner (minimum cable section equal to 1,5 mm^2).
- the socket used is compatible with the plug provided

⚠ It is required:
- provide a suitable grounding connection
- provide an all-pole switch with a contact opening distance of 3 mm or more that allows complete disconnection under overvoltage category III conditions

- Install a residual-current device. Failure to install this device may result in electric shock

⚠ Use a dedicated power supply circuit. Never use a power supply to which another appliance is also connected because of the risk of overheating, electric shock or fire.

⚠ For the electrical connection, use a cable that is long enough to cover the entire distance without any connection. Do not use extension cables. Do not apply other loads on the power supply.

⚠ After connecting the interconnection and power cables, make sure that the cables are arranged so as not to exert excessive forces on the covers on the cables. Incomplete connections of the covers may result in overheating of the terminals, electric shock or fire.

⚠ Any replacement of the power cable must be carried out by authorised personnel and in accordance with the applicable national codes.

⚠ The Manufacturer is not liable for any damage caused by the lack of earthing or failure to comply with the specifications in the respective diagrams.

⚠ Please check that the power supply is provided with suitable protections against overloads and/or short-circuits (using a 10 Amp Time delay fuse or other equivalent devices is recommended).

⚠ To prevent any risk of electrocution, always disconnect the main circuit breaker before making electric connections or performing any maintenance on the units.

⚠ Access to the electrical panel is only necessary when replacing the wired cable or when using the presence contact.

⛔ It is forbidden the use of gas and water pipes for grounding the appliance.

6.13.2 Access to the electrical panel

1.	Intake grille	**4.**	Connectors
2.	Aesthetic front panel	**5.**	Electrical panel covering
3.	Control Panel	**6.**	Fixing screws

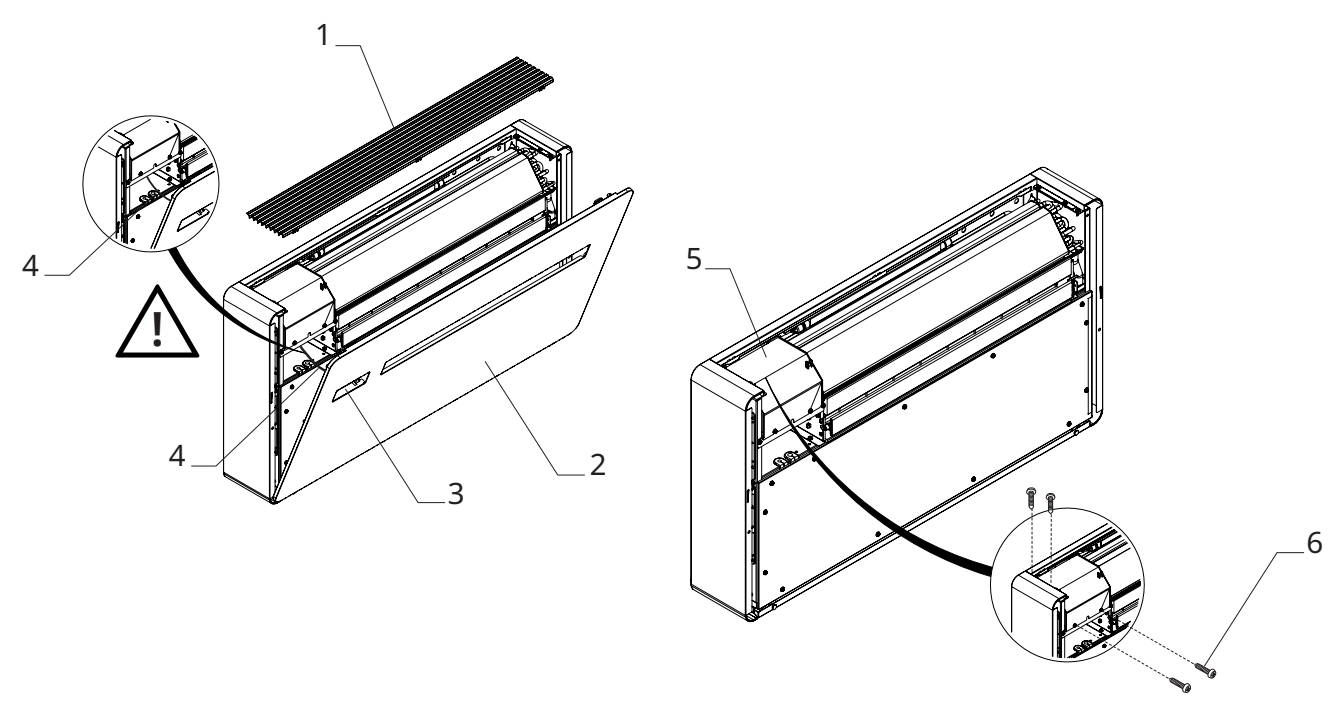

⚠ Access to the electrical panel is only permitted to qualified personnel.

⚠ Before carrying out any work, please ensure the power supply is disconnected.

To access:

- ► remove the aesthetic panel (if fitted)
- ► see chapter **"Removal of aesthetic panels and grilles"** *p. 35*

To access the connections:

- ► unscrew the screws of the electrical panel
- ► remove the electrical panel cover

6.13.3 External Side Fan Connection

1.	Side panel
2.	Fixing screws
3.	Fan connection terminal

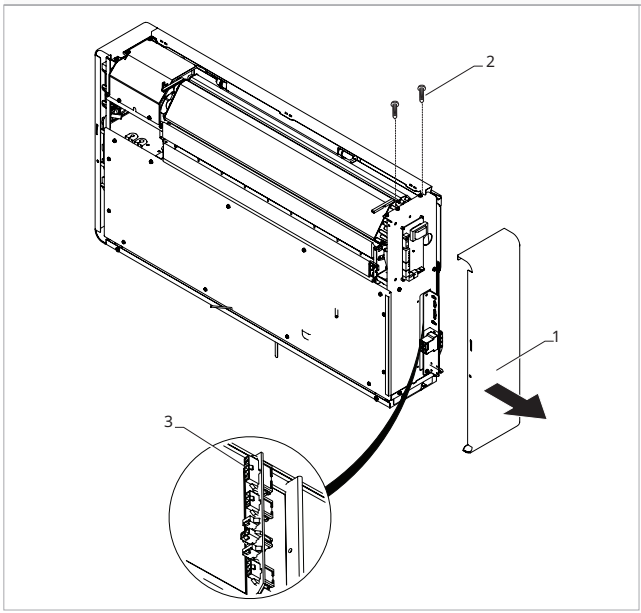

For the connection:

- ► unscrew the fixing screws
- ► remove the right side panel
- ► insert the fan connector into the designated connector on the board

6.13.4 Power supply connection

The appliance leaves the factory fully wired and equipped with a cable with F-type plug for connection to the power supply. To power the unit simply insert the plug into a suitable socket protected by a circuit breaker.

⚠ In the event of damage to the power cable, contact the Technical Service Centre or qualified personnel for replacement.

⛔ It is forbidden to replace damaged cables yourself.

1.	Circuit breaker 1P+N, 6A, type C
2.	F-type socket
3.	Plug supplied with the device

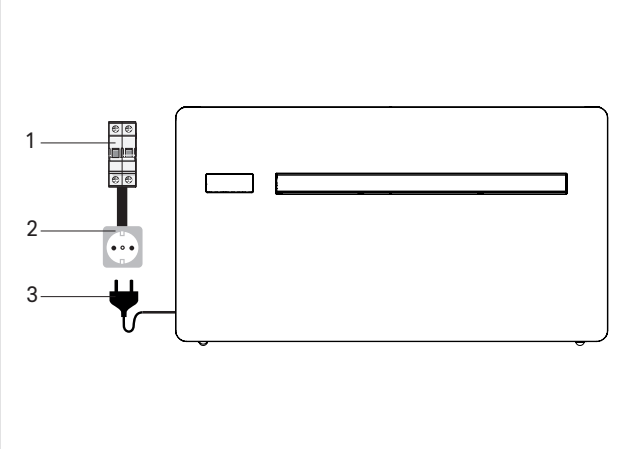

If necessary, it is possible to remove the factory cable with plug and connect the power supply directly to the terminal block (recommended connection for installation of the equipment at the top of the wall).

PE-IN	Earth connection
ACL-IN	Phase
ACN-IN	Neutral
B A	Serial connection
CP	Presence contact (normally jumpered)

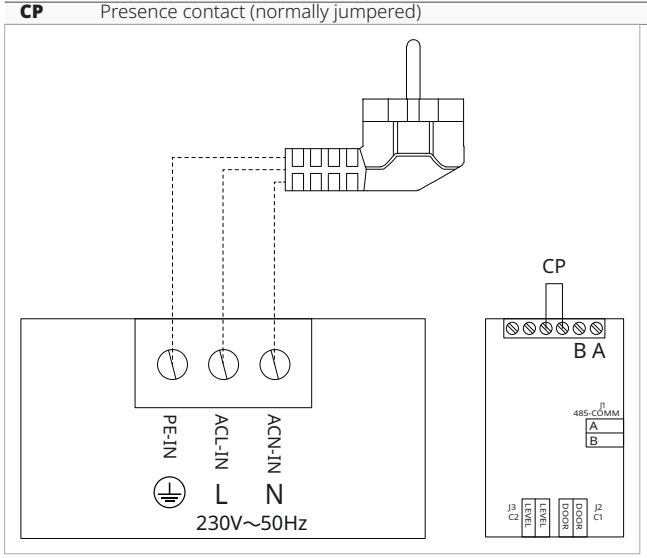

⚠ This operation must be only be carried out by the installation or Technical Assistance Centre.

To carry out direct connections and substitute the power cord using the cable in the wall, proceed as follows:

- ► access the terminal block
- ► disconnect the power cable with plug by unscrewing the 3 screws on the terminal block
- ► Connect the wall cable, checking that the power supply line has a suitable earth connection
- ► The power supply line has a suitable earth connection and that it is sized for the maximum absorption of the conditioner (minimum cable section equal to 1,5 mm^2).

6.13.5 CP occupancy contact input connection

When the CP contact opens (very low voltage, connected to a volt-free contact) the appliance is put in stand-by and CP appears on the display.

Through this contact it is possible to connect an external device that inhibits operation of the unit such as: window opening contact, remote on/off, infrared presence sensor, activation badge etc.

⚠ We recommend using a double insulated cable.

CP	Presence contact (normally jumpered)
B A	Serial connection

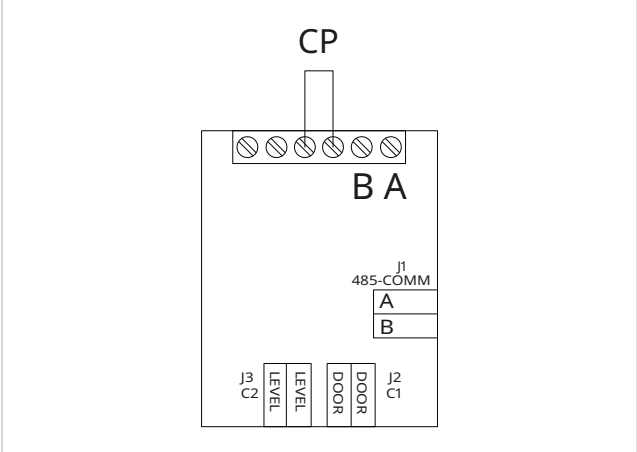

6.14 High/low installation configuration

The unit can be installed either at the bottom of the wall (adjacent to the floor) or at the top of the wall (adjacent to the ceiling).
The unit is supplied for low wall installation with the air outlet from the bottom to the top.
For high-wall installation:

- ► purchase the the lower cover decorative kit code GB0737

⚠ High wall installation is recommended if the unit is to be used for cooling only.

⚠ If the unit operates in cooling and heating or heating only, low wall installation is recommended.

6.14.1 Modification for low-wall to high-wall installation

⚠ If necessary, the air outlet can be changed from top to bottom.

⚠ This operation must be performed while the appliance is switched off and disconnected.

A	Overhead installation
B	Low installation (factory settings)
1.	Aesthetic lower cover kit (Code GB0737)
2.	Fixing screws (supplied with the optional kit GB0737)
3.	Right bracket for supply deflector support

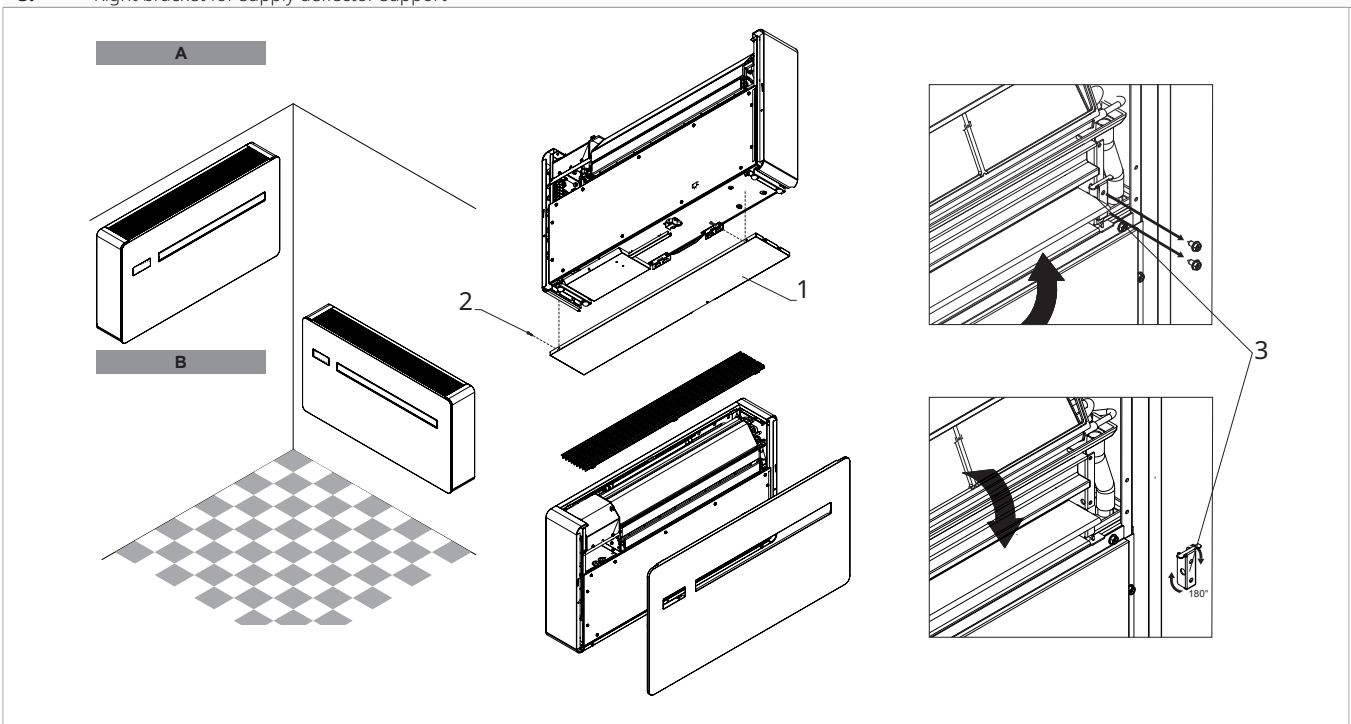

To make changes:

- ► if installed, remove aesthetic panels see chapter "Removal of aesthetic panels and grilles" *p. 35*
- ► Position the lower aesthetic cover kit (code GB0737)
- ► fix with the screws provided
- ► remove the fixing screws of the right support bracket for the flap
- ► turn the right flap support bracket 180°
- ► reassemble the right flap support bracket
- ► reassemble the aesthetic panel
- ► re-install the grille
- ► see the chapter "Assembly of aesthetic panels and grilles" *p. 36*

6.14.2 Configuration

After completing the mechanical operations of changing the position of the mobile air outlet deflector, it is necessary to configure the unit's control electronics.

To configure

- ► refer to chapter "Installation position" *p. 39*

⚠ For the appliance to work properly, each time the configuration of the air outlet flap is modified, the electronic control must be set.

6.15 Operations after installation

Before leaving the site, the packaging should be gathered up and all traces of dirt that have deposited on the unit during assembly should be eliminated with a damp cloth.
Once all the checks and controls on the correct operation of the appliance have been completed, the installer must explain the following to the user:

- the basic characteristics of the appliance
- the instructions for use
- the routine maintenance

6.16 Removal of aesthetic panels and grilles

1.	Intake grille	**4.**	Connectors
2.	Filter	**5.**	Aesthetic front panel
3.	Control Panel	**6.**	Aesthetic side panel

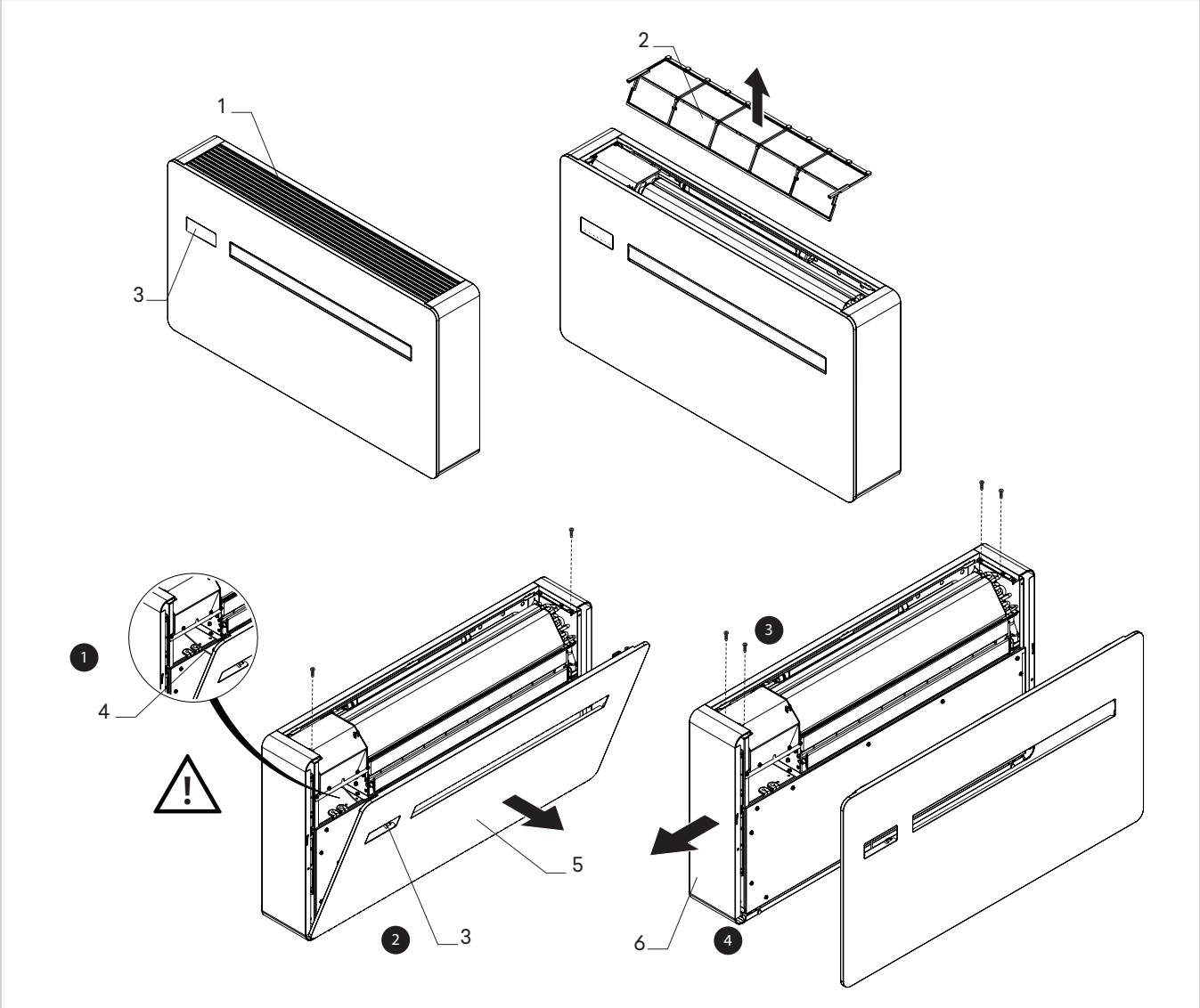

⚠ The control panel is fixed on the front panel and is connected to the device by a connector.

⚠ Disconnect the connector when opening the front panel.

Removing the Aesthetic Panels and Grilles

- ► remove the upper grille
- ► remove the filter
- ► unscrew the fixing screws of the aesthetic panel
- ► disconnect the connector of the on-board control
- ► remove the aesthetic panel
- ► unscrew the fixing screws of the side panel
- ► remove the side panel

6.17 Assembly of aesthetic panels and grilles

1.	Aesthetic side panel	**4.**	Control Panel
2.	Aesthetic front panel	**5.**	Filter
3.	Connectors	**6.**	Intake grille

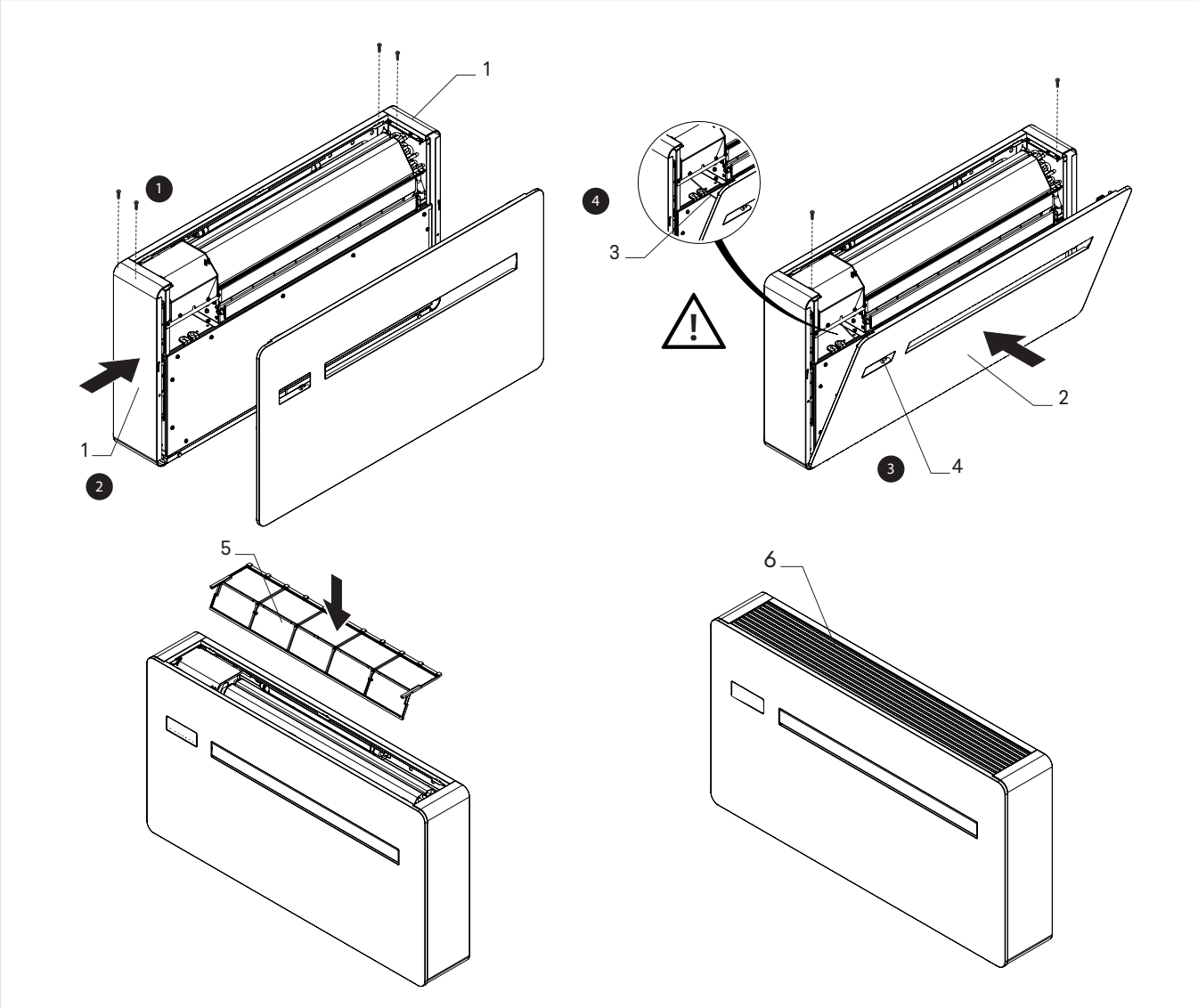

To assemble the panels and grilles

- ► place the side panel
- ► screw in the fixing screws
- ► positioning the aesthetic panel
- ► connect the connector of the on-board control
- ► screw in the fixing screws
- ► place the filter
- ► positioning the grill

7. TOUCHPAD AND REMOTE CONTROL

7.1 Interface

7.1.1 Description

The touchpad control is supplied as standard on board the unit, does not require any connections and enables:

- show the operating status
- show any alarms
- select the various functions

7.1.2 Touchpad

Keys and functions related.

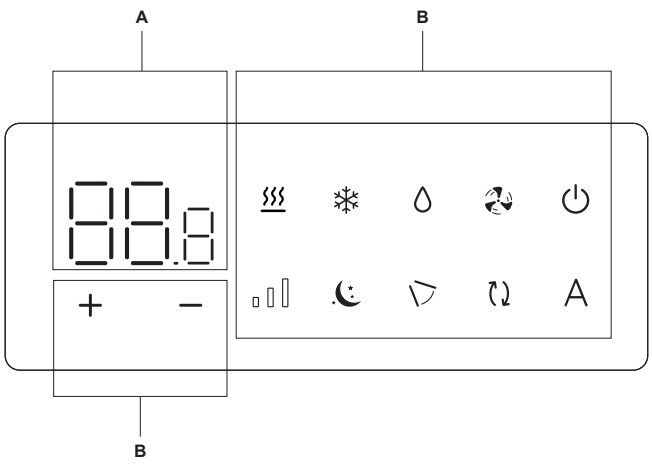

A	Display area
B	Keys area
	Setpoint
	Up key
	Down key
	Allows you to select the Heating mode of operation
	Allows you to select the Cooling mode of operation
	Allows you to activate the Dehumidification function
	Allows you to activate the Ventilation function
	This can be used to switch the unit on or off
	Allows you to control ventilation speed
	Enables the Night function
	Allows you to activate the Moving Deflector Control function
	Allows you to activate the Air Change function (not visible on base unit)
	Enables the Automatic function

7.1.3 Remote control

Keys and functions related.

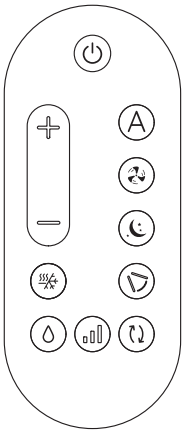

	Up key
	Down key
	This can be used to switch the unit on or off
	Enables the Automatic function
	Allows you to activate the Ventilation function
	Enables the Night function
	Allows you to activate the Moving Deflector Control function
	This can be used to select the operating mode (Cooling or Heating)
	Allows you to activate the Dehumidification function
	Allows you to control ventilation speed
	Allows you to activate the Air Change function (not visible on base unit)

Inserting the battery

⚠ Use only a dry 3 V lithium battery CR2430 (included) with the remote control.

To insert the battery:

- ► open the slot on the bottom of the remote control
- ► insert the battery according to the +/- polarity
- ► close the cover after inserting the battery

⚠ Used batteries must be disposed of appropriately through special waste collection centres provided by the local authorities.

7.2 Basic menu

To access the basic menu

- ► press ⏻ for 10 seconds
  Appears CF.

To move within the menu or change values

- ► use + −

To select a menu item and to confirm the changes made

- ► press ⏻
  The menu item is selected and the settings are accessed.
  Changes are confirmed when the symbol appears.

To exit menu items without saving

- ► press A
  You exit the selected menu item.

To exit the basic menu

- ► press once A
  Appears – –.
- ► press A again
  You exit the basic menu.

⚠ After a period of 30 seconds from the last action, the display exits the menu.

7.2.1 Menu items

Ub: Buzzer volume

uP: Wi-Fi pairing

ur: Wi-Fi reset

oH: Temperature offset in Heating

oC: Temperature offset in Cooling

CF: Scale

Ht: Configuration of resistance type

7.2.2 Buzzer volume

To change the volume

- ► select Ub
  the volume setting range is from 0 (min) to 3 (max).
  By default the device is set to 2.

⚠ The volume changes after change is confirmed.

7.2.3 Activate Wi-Fi

To activate Wi-Fi

- ► select uP
- ► press ⏻ to change settings
- ► use the + − icons in sequence
  Appears 1 1 0.
- ► press +
  appears to enable Wi-Fi pairing.
- ► press ⏻ to confirm

⚠ The device remains visible on the App for the first 15 minutes after the device is switched on.

7.2.4 Wi-Fi reset

To reset the Wi-Fi credentials and return the device to its original configuration

- ► select ur
- ► press ⏻ to change settings
- ► use the + − icons in sequence
  Appears 1 1 0.
- ► press +
  appears to reset Wi-Fi credentials.
- ► press ⏻ to confirm
  Credentials have been reset.

7.2.5 Temperature offset in Heating

To set the temperature offset in Heating

- ► select oH
  The temperature offset setting range in Heating is from -9 °C (minimum) to 9 °C (maximum).
  By default the device is set to 0.

⚠ The range for °F is smaller, equivalent to -5 °C/5 °C.

7.2.6 Temperature offset in Cooling

To set the temperature offset in Cooling

- ► select oC
  The temperature offset setting range in Cooling is from -9 °C (minimum) to 9 °C (maximum).
  By default the device is set to 0.

⚠ The range for °F is smaller, equivalent to -5 °C/5 °C.

7.2.7 Scale

To change the temperature unit of measure

- ► select CF
- ► select °C or °F
  By default the temperature unit of measure is ° C.

7.2.8 Heating element type configuration

To configure the heating element type

- ▶ select HE
- ▶ select NO to disable the heating element
- ▶ select r1 to configure the heating element to 1 kW
- ▶ select r2 to configure the heating element to 2 kW

By default the device is set to r1.

7.3 Advanced Menu

Through the control panel, it is possible to access the advanced menu.

⚠ **To access the advanced menu, it is first necessary to access the basic menu. See section "Basic menu"** *p. 38***.**

To access the advanced menu

- ▶ from the basic menu press + − at the same time for about 5 seconds
  Appears HE.
  The advanced menu is accessed.

To move within the menu or change values

- ▶ use + −

To select a menu item and to confirm the changes made

- ▶ press ⏻
  The menu item is selected and the settings are accessed.
  Changes are confirmed when the symbol ⛶ *appears.*

To exit menu items without saving

- ▶ press A
  You exit the selected menu item.

To exit the settings menu

- ▶ press A
  Appears CF.
  You return to the basic menu.

⚠ After a period of 30 seconds from the last action, the display exits the menu.

7.3.1 Menu items

HC: Heating only or Cooling only configuration

ho: Hotel Mode

in: Installation position

Ad: Modbus address

rF: Remote function

co: Connectivity expansion module

Hr: ERV module activation

Hn: ERV module operating mode

Sn: Nebulization kit activation

At: Summer condensate drain activation

HL: Configuration minimum temperature limit in heating.

Hh: Configuration of maximum temperature limit in heating mode.

CL: Configuration minimum temperature limit in cooling.

Ch: Configuration maximum temperature limit in cooling.

HE: Heating element operation mode configuration

7.3.2 Heating only or Cooling only configuration

⚠ It is possible to disable the Heating or Cooling function by setting the unit in Heating only or Cooling only mode.

To set the Heating only or Cooling only mode

- ▶ select HC
- ▶ select hc to set the Heating and Cooling mode
- ▶ select ho to set the Heating only mode
- ▶ select co to set the Cooling only mode

By default, the unit is set to Hc.

7.3.3 Hotel Mode

To set the Hotel mode

- ▶ select ho
- ▶ select YS to turn on Hotel mode
- ▶ select NO to turn off the Hotel mode

By default the device is set to NO.

Activating the Hotel mode:

- the Dehumidification Only and Automatic functions are deactivated
- only the Ventilation Only, Heating and Cooling functions remain active
- the temperature setting range is reduced, in Cooling you can set from 22 °C to 28 °C, in Heating you can set from 16 °C to 24 °C

7.3.4 Installation position

After completing the mechanical operations of changing the air outlet flap position, it is necessary to configure the unit.

To configure the installation position

- ▶ select
- ▶ select dn to set up installation at the bottom of the device
- ▶ select uP to set the top installation of the unit

By default, the unit is set to dn.

⚠ For the appliance to work properly, each time the configuration of the air outlet flap is modified, the electronic control must be set.

7.3.5 Modbus address

To set the Modbus address

- ▶ select
- ▶ act on

the setting range is from 1 (min) to 99 (max).
By default the device is set to 1.

7.3.6 Remote function

To set the Remote function

- ▶ select
- ▶ select no to disable the Remote function
- ▶ select YS to enable Remote function

By default the device is set to NO.

⚠ Set the remote mode to make the touchpad view only.

7.3.7 Connectivity expansion module

To enable or disable the connectivity expansion module

- ▶ select
- ▶ select YS to activate the connectivity expansion module
- ▶ select no to disable the connectivity expansion module

By default, the appliance is set to YS.

⚠ In case of pairing with a wall control of the M7 series, it is mandatory to disable the connectivity expansion module.

7.3.8 ERV activation

⚠ Function valid only for models with ERV module installed.

To activate te ERV module

- ▶ select
- ▶ select NO to disable the ERV module
- ▶ select YS to enable the ERV module

By default the device is set to NO.

7.3.9 ERV module operating mode

⚠ Function valid only for models with ERV module installed.

To activate te ERV module

- ▶ select
- ▶ select NO to disable
- ▶ select YS to enable

By default the device is set to NO.

7.3.10 Nebulization kit activation

⚠ Function valid only for models with nebulization kit installed.

To enable the nebulization kit

- ▶ select
- ▶ select NO to disable the nebulization kit
- ▶ select YS to enable the nebulization kit

By default the device is set to NO.

7.3.11 Summer condensate drain activation

To enable the summer condensate drain function

- ▶ select
- ▶ select NO to disable
- ▶ select YS to enable

By default the device is set to NO.

7.3.12 Heating element operation mode configuration

⚠ Use only for models with heating element.

To configure the operation mode of the heating element

- ▶ select
- ▶ select rE for combined heat pump and heating element operation
- ▶ select rH for heating element-only operation (Heating only)
- ▶ select rt for alternating operation
  - with external temperature > -10 °C, combined operation of heat pump and resistance is activated
  - with external temperature < -10 °C, operation with only resistance is activated

By default, the unit equipped with electric resistance is set to rE.

7.3.13 Set the minimum temperature limit in heating

⚠ **The function can only be activated with active.**

To set the minimum temperature limit in heating

- ▶ select
- ▶ act on

The setting range is from a minimum of 16 to Hh-1.
By default it is set to 16 °C.

⚠ Between HL and Hh the set value varies by 1 °C.

7.3.14 Set the maximum temperature limit in heating

⚠ **The function can only be activated with active.**

To set the maximum temperature limit in heating

- ▶ select
- ▶ act on

The setting range is from a minimum of HL+1 to 31.
By default it is set to 24 °C.

⚠ Between HL and Hh the set value varies by 1 °C.

7.3.15 Set the minimum temperature limit in cooling

⚠ **The function can only be activated with active.**

To set the minimum temperature limit in cooling

- ► select
- ► act on
  The setting range is from a minimum of 16 to Ch-1.
  By default it is set to 22 °C.

⚠ Between CL and Ch the set value varies by 1 °C.

7.3.16 Set the maximum temperature limit in cooling

⚠ **The function can only be activated with active.**

To set the maximum temperature limit in cooling

- ► select
- ► act on
  The setting range is from a minimum of CL+1 to 31.
  By default it is set to 28 °C.

⚠ Between CL and Ch the set value varies by 1 °C.

7.4 Visualization of alarms on display

⚠ In the event of an alarm, the device still maintains active functions.

⚠ A flashing symbol and alarm code are displayed on the touchpad to indicate alarms.

Code	Alarm description
Er01	Room temperature probe error (RT)
Er02	Error of the temperature sensor of the internal heat exchanger (IPT)
Er03	Error outdoor air temperature probe (OT)
Er04	Error of the external heat exchanger temperature probe (OPT)
Er05	Malfunctioning of the internal fan
Er06	Malfunction of the external fan
Er07	Driver communication error
Er08	Compressor discharge temperature probe (TD) error
Er09	Communication error with remote thermostat M7
OF	Maximum level float intervention in the condensate drip tray (ALARM)
CP	Open (CP) contact
Er12	Driver error - compressor failure
CE	Communication error between main circuit board and display
Er16	4-way valve management error or alarm for insufficient refrigerant charge
Er17	Driver parameter error or compressor incompatibility
Er19	Heating element safety temperature probe error (LEVEL)
Er20	Error of the second temperature probe of the external heat exchanger (GT)
Er22	Wrong power supply
Er23	UV lamp kit error
Er24	ERV kit error
BL	Key lock

8. M7 SERIES CONTROL EEB749

8.1 Interface

8.1.1 Description

M7 series LED electronic control panels with touch interface for wall installation allow:

- room temperature control
- management of the main functions of the device
- temperature and humidity measurement
- fan speed regulation

They are fitted with:

- internal memory with data saving even in case of shut-down or power outage

⚠ After 20 seconds after the last action the panel brightness is reduced, only the room temperature is seen on the display.

⚠ The maximum brightness is restored to the pressure of any key.

⚠ **It is mandatory to disable the connectivity expansion module (Wi-Fi) from the Touchpad. See paragraph "Connectivity expansion module"** *p. 40***. In case of using the app to control the unit, it must be paired with a wall control of the M series cod. EFB749.**

8.1.2 Display

Status and active alarms on display.

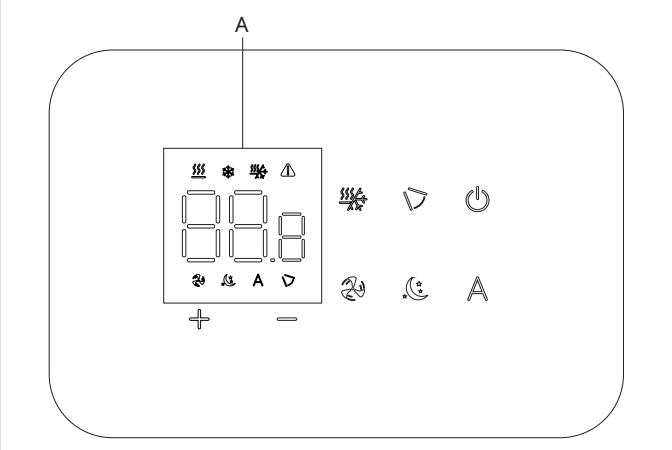

A	Display area
	Setpoint
	Alarm signals
	Moving Deflector Control function active
	Active ventilation function
	Heating / Cooling (Cannot be used)
	Cooling operating mode active
	Heating operating mode active
	Automatic function active
	Night function active

8.1.3 Keys functions

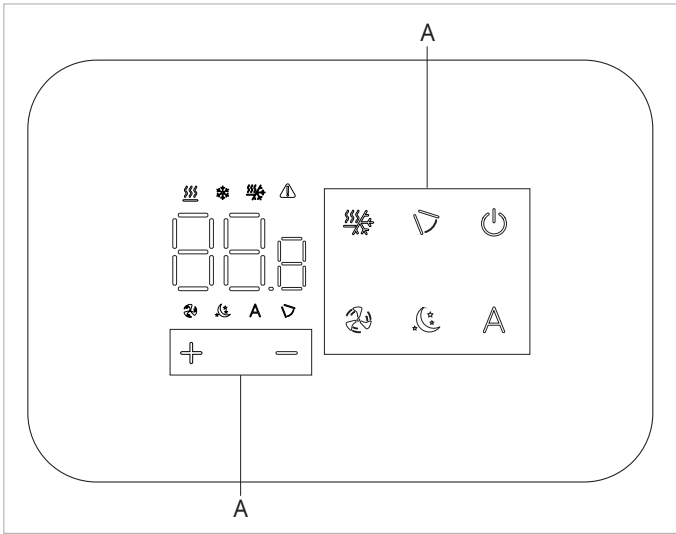

A	Keys area
	Up key
	Down key
	This can be used to switch the unit on or off
	Allows you to activate the Moving Deflector Control function
	Allows you to control ventilation speed
	This can be used to select the operating mode (Cooling or Heating) or Autochangeover
	Enables the Automatic function
	Enables the Night function

8.2 Installation

8.2.1 Description

The wall-mounted remote control is an electronic LED thermostat with a touch interface, with the possibility of controlling multiple appliances equipped with the same electronic board. It is equipped with a temperature and humidity probe.

⚠ The control can manage a maximum of 16 units.

8.2.2 Mounting

⚠ The control panel for wall control is to be installed inside a 503 electrical box.

⚠ A wall must be prepared to accommodate the 503 electrical box before installing the wall control.

⚠ Ensure that:
- the support surface is capable of supporting the weight of the appliance
- the support surface does not affect load-bearing elements of the building, pipes, or electrical lines
- the functionality of load-bearing elements is not compromised

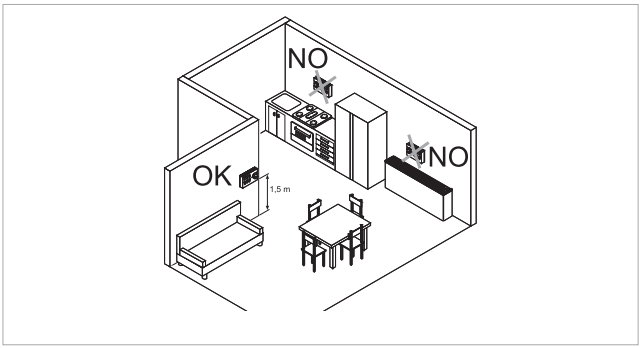

The wall-mounted remote control must be installed:
- on internal walls
- at a height of about 1,5 m from the floor

⚠ Should the control be located in an area utilised by persons with reduced physical capabilities, please refer to local regulations.
- away from doors or windows
- away from heat sources (heaters, convectors, stoves, direct sunlight)

⚠ The wall control is provided inside the package already assembled.

1.	Back plate
2.	Wall-mounted control panel

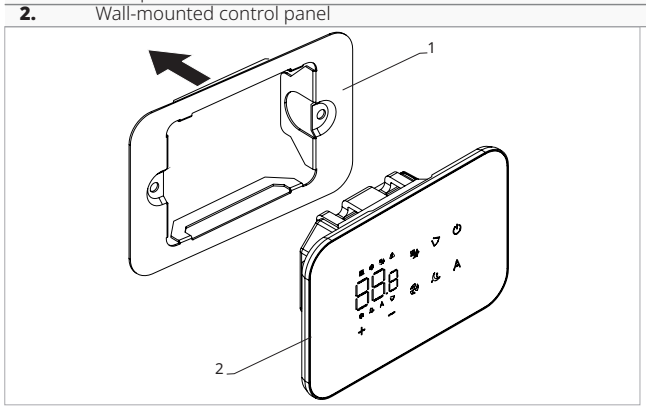

Before wall installation:
- ► separate the back plate from the control panel

1.	Fixing screws
2.	Back plate
3.	Holes for fixing to electrical box
4.	Electric box 503

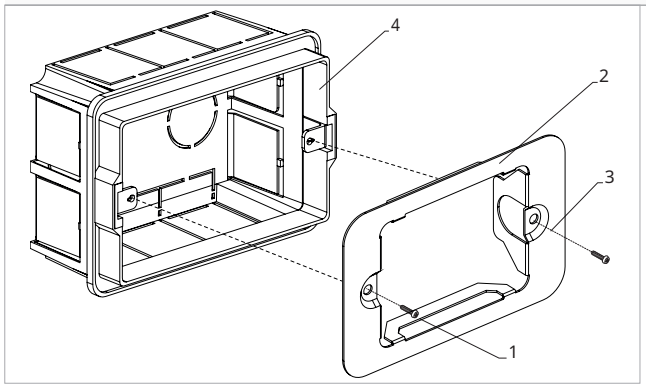

For wall mounting of the control panel:
- ► fix the control base to the electrical box 503 with screws
- ► connect the electrical wiring

⚠ It is mandatory to use ferrules on all conductors, both on the board side and on the wall-mounted terminal block side, to prevent permanent damage to the equipment.

To avoid incorrect temperature measurement:
- ► seal the cable entry points to prevent air from passing through
- ► seal all openings in the box or wall

⚠ proper sealing ensures the correct operation of the sensor and the reliability of thermal regulation

⚠ Before making the connections, please verify that the control terminal block is on the right-hand side.

1.	Electric box 503
2.	Back plate
3.	Wall-mounted control panel

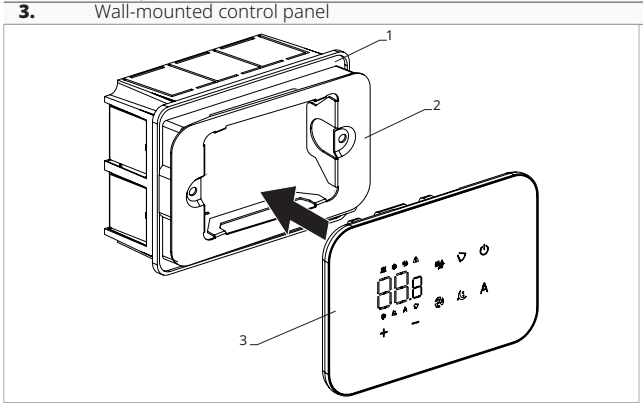

► reposition the control panel on the base

⚠ Pay attention not to crush the conductors when you close the control.

8.3 Single connection diagram

1.	Terminal block for device connection	**-+**	12 V-DC 1A power supply
CP	Presence contact (normally open)	**M7**	Command for wall control M7
BA	Serial connection for wall-mounted remote control		

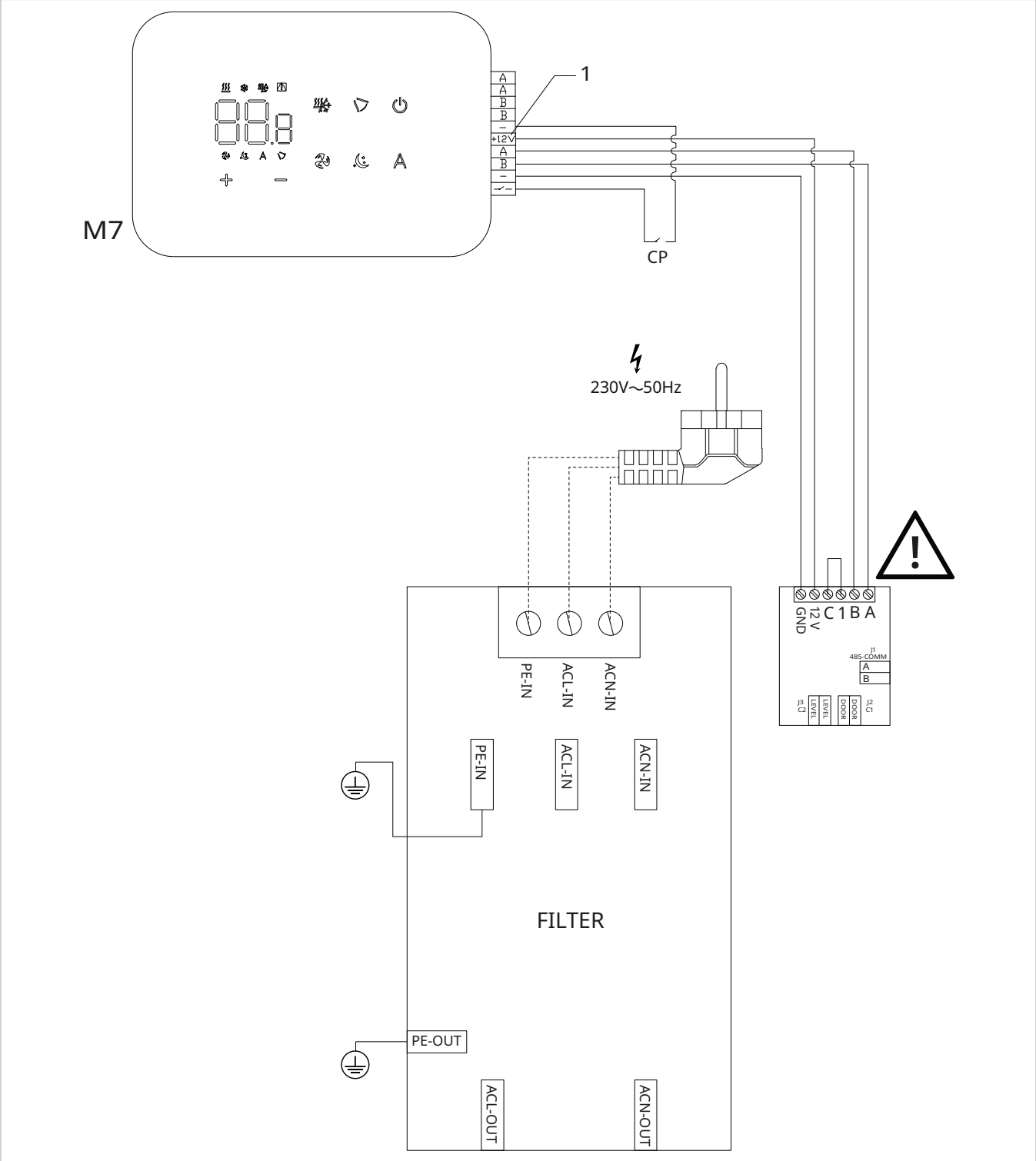

⚠ **Reverse A and B for connecting the wall control panel with the board.**

8.4 Connections

8.4.1 Preliminary warnings

⚠ It is mandatory to use ferrules on all conductors, both on the board side and on the wall-mounted terminal block side, to prevent permanent damage to the equipment.

The terminals accept:

- rigid or flexible wires with a 0.2 to 1 mm² cross-section
- rigid or flexible wires with 0,5 mm² cross-section if two wires are connected to the same terminal block
- rigid or flexible wires with 0,75 mm² cross-section If the wires have wire end ferrules with a plastic collar

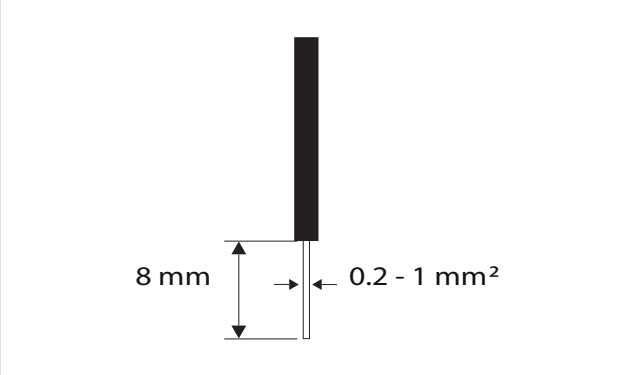

To connect the cables:

- ► strip 8 mm of the wire
- ► if the wire is rigid, you can insert it easily whereas
- ► if it is flexible, use appropriate crimp terminals
- ► push the wire in completely
- ► check the right fixing by pulling it gently

8.4.2 Control Panel

⚠ The control panel for wall control must be ordered separately.

Terminal block position:

1. Terminal block (Back view panel)

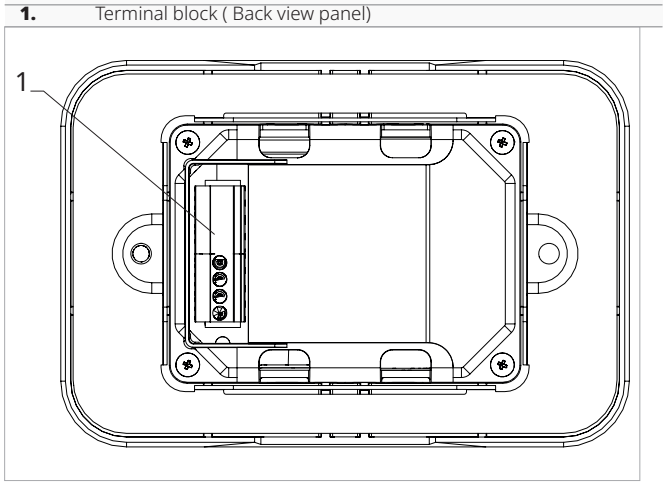

To make the connections:

- ► connect the power supply cables + and – to the GND and 12V terminals
- ► connect the ModBus serial connection cables to terminals A and B

⚠ Reverse A and B for connecting the wall control panel with the board.

8.4.3 Presence contact CP

Through this device it is possible to connect an external control signal that inhibits the operation of the control signal, for example:

- opening window contact
- remote on/off
- infrared presence sensor
- activation badge
- remote change of season

Function

The contact is normally open (NO).

- ► when closing the CP contact, connected to a potential-free contact, the device switches to stand-by mode

  CP appears on the display.
- ► At the touch of a button on the display the symbol ⚠ flashes.

⊖ It is forbidden to connect the CP input to that of another unit electronic board. Use separate contacts.

8.4.4 Extended display

To enable device connectivity and enable selection of fan power level, the display must be extended. See section "Extended display" *p. 48*.

8.5 Basic menu

To access the basic menu

- ► with the display off, hold down ⏻ for 10 seconds

  The device turns on and ON appears
- ► keep pressed until the indication ON appears
- ► release the ⏻ key

  The symbol OC appears

To navigate in the menu
- ► use the icons + −

To select a menu item and to confirm the changes made
- ► press the icon ⏻
  Confirming the change takes you to the next item.

To exit the menu
- ► press the icon ⏻ for 10 seconds

⚠ After a period of 30 seconds from the last action, the display exits the menu.

8.5.1 Menu items

ot: AIR probe offset (air probe setting)

ur: Value read by the R.H. sensor

ut: Probe Offset PT4

uS: Humidity setpoint

uI: Humidity hysteresis

CF: Scale

ub: Buzzer volume

uu: Not used

uP: Not used

ho: Hotel Mode

8.5.2 Set AIR probe offset

To set the air probe offset
- ► select ot
- ► press ⏻ to change settings
- ► increase or decrease the value with the icons + −
- ► press ⏻ to confirm
  By default it is set to -2,5°C.
  The setting range is from a minimum of -12.0 °C to a maximum of 12.0 °C.

8.5.3 Set probe offset RH

⚠ Modify only after real deviations from an actual measurement has been established with professional equipment.

To set the RH probe offset
- ► select ut
- ► press ⏻ to change settings
- ► increase or decrease the value with the icons + −
- ► press ⏻ to confirm
- ► By default it is set to -2.

8.5.4 Set the humidity setpoint

To set the humidity setpoint
- ► select uS
- ► press ⏻ to change settings
- ► increase or decrease the value with the icons + −
- ► press ⏻ to confirm
  By default it is set to 50.
  The setting range is from 20.0% to 90.0%.

8.5.5 Setting the humidity hysteresis

To set the humidity hysteresis
- ► select uI
- ► press ⏻ to change settings
- ► increase or decrease the value with the icons + −
- ► press ⏻ to confirm
  By default it is set to 5.
  The setting range is from 1 (min) to 30 (max).

8.5.6 Scale

To change the temperature unit of measure
- ► select CF
- ► press ⏻ to change settings
- ► select °C or °F
- ► press ⏻ to confirm
  By default the temperature unit of measure is ° C.

8.5.7 Adjusting the volume

To change the volume
- ► select ub
- ► press ⏻ to change settings
- ► increase or decrease the value with the icons + −
- ► press ⏻ to confirm
  By default it is set to 1.
  The volume setting range is from 00 (min) to 03 (max).

⚠ The volume changes after confirming the modification.

8.5.8 Setting the Hotel Mode

To set the Hotel mode

- ► select hO
- ► select YS to turn on Hotel mode
- ► select NO to turn off the Hotel mode
  By default the device is set to NO.

Activating the Hotel mode:

- the Dehumidification Only and Automatic functions are deactivated
- only the Ventilation Only, Heating and Cooling functions remain active
- the temperature setting range is reduced, in Cooling you can set from 22 °C to 28 °C, in Heating you can set from 16 °C to 24 °C

8.6 Advanced Menu

Through the control panel, it is possible to access the advanced menu.

⚠ **To access the advanced menu, it is first necessary to access the basic menu. See section "Basic menu"** *p. 46***.**

To access the advanced menu

- ► from the basic menu press A
  Appears 00.
- ► press the + key once
  Appears 01.
- ► press ⏻ to confirm and log in
  The advanced menu is accessed.

To navigate in the menu

- ► use the icons + −

To select a menu item and to confirm the changes made

- ► press ⏻ for 2 seconds
  Confirming the change takes you to the next item.

To exit the menu

- ► press ⏻ for about 10 seconds
  Appears ot.
- ► press ⏻ for about 10 seconds
  The display turns off.
- ► or wait 30 seconds after the last action

⚠ After a period of 30 seconds from the last action, the display exits the menu.

8.6.1 Menu items

Ad: Not used

Pr: Not used

di: Options for digital input

t1: Not used

rH: Not used

rC: Not used

UC: Not used

Ac: Not used

Ah: Not used

Ed: Extended display

Ab: Enabling brightness sensor

Fr: Not used

8.6.2 To select digital input

To change the digital input

- ► select di
- ► press ⏻ to change settings
- ► select CP for presence contact (default)
- ► select CO to cooling open
- ► select CC to cooling close
- ► press ⏻ to confirm
  By default digital input is set to CP.

⚠ For return to the default settings, set the digital input to "CP".

⚠ By selecting one of the other inputs (CO,CC) the seasonality is locked. It is not possible to modify it through the key ❄/☀ of the control.

8.6.3 Extended display

⚠ **Allows device connectivity and enables the selection of the ventilation power level.**

⚠ To use the ventilation speed selection, it is necessary to enable the display extension.

To enable the display extension

- ► select Ed
- ► select no to disable
- ► select Ys to enable
  By default, the device is set to no.

8.6.4 Optical sensor

⚠ By default, the brightness sensor is set.

To disable the brightness sensor:

- ► select Ab
- ► press ⏻
  Appear Ys.
- ► press +
- ► select no
- ► press ⏻ to confirm
  The brightness sensor is disabled.

⚠ The brightness sensor adapts to room lighting.

8.7 Alarm display on wall control panel

⚠ In the event of an alarm, the device still maintains active functions.

⚠ Alarm codes are shown on the on-board display. Refer to the "Visualization of alarms on display" *p. 41* chapter for the complete list.

9. M7 SERIES COMMANDS EFB749

9.1 Interface

9.1.1 Description

M7 series LED electronic control panels with touch interface for wall installation allow:

- room temperature control
- management of the main functions of the device
- temperature and humidity measurement
- fan speed regulation

They are fitted with:

- internal memory with data saving even in case of shut-down or power outage

⚠ After 20 seconds after the last action the panel brightness is reduced, only the room temperature is seen on the display.

⚠ The maximum brightness is restored to the pressure of any key.

⚠ **It is mandatory to disable the connectivity expansion module (Wi-Fi) from the Touchpad. See paragraph "Connectivity expansion module"** *p. 40***.**

9.1.2 Display

Status and active alarms on display.

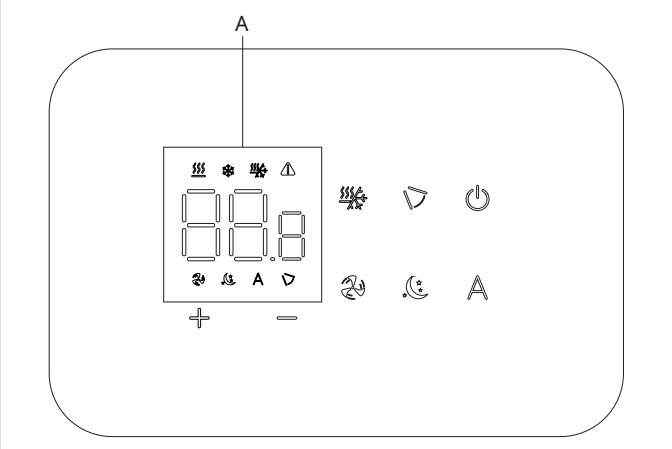

A	Display area
	Setpoint
	Alarm signals
	Moving Deflector Control function active
	Active ventilation function
	Heating / Cooling (Cannot be used)
	Cooling operating mode active
	Heating operating mode active
	Automatic function active
	Night function active

9.1.3 Keys functions

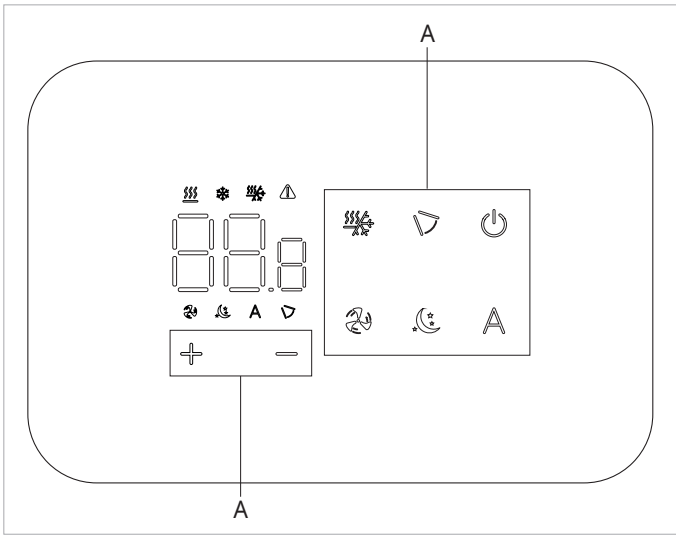

A	Keys area
	Up key
	Down key
	This can be used to switch the unit on or off
	Allows you to activate the Moving Deflector Control function
	Allows you to activate the Ventilation function
	This can be used to select the operating mode (Cooling or Heating)
	Enables the Automatic function
	Enables the Night function

9.2 Installation

9.2.1 Description

The wall-mounted remote control is an electronic LED thermostat with a touch interface, with the possibility of controlling multiple appliances equipped with the same electronic board. It is equipped with a temperature and humidity probe.

⚠ The control can manage a maximum of 16 units.

⚠ The app "Innova" is available to control the following command.

9.2.2 Mounting

⚠ The control panel for wall control is to be installed inside a 503 electrical box.

⚠ A wall must be prepared to accommodate the 503 electrical box before installing the wall control.

⚠ Ensure that:
- the support surface is capable of supporting the weight of the appliance
- the support surface does not affect load-bearing elements of the building, pipes, or electrical lines
- the functionality of load-bearing elements is not compromised

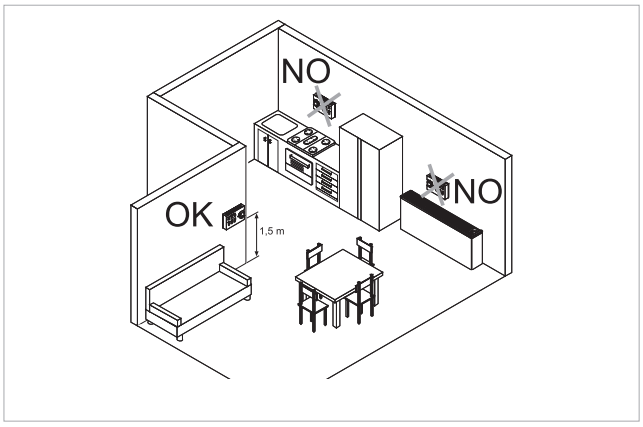

The wall-mounted remote control must be installed:
- on internal walls
- at a height of about 1,5 m from the floor

⚠ Should the control be located in an area utilised by persons with reduced physical capabilities, please refer to local regulations.
- away from doors or windows
- away from heat sources (heaters, convectors, stoves, direct sunlight)

⚠ The wall control is provided inside the package already assembled.

1.	Back plate
2.	Wall-mounted control panel

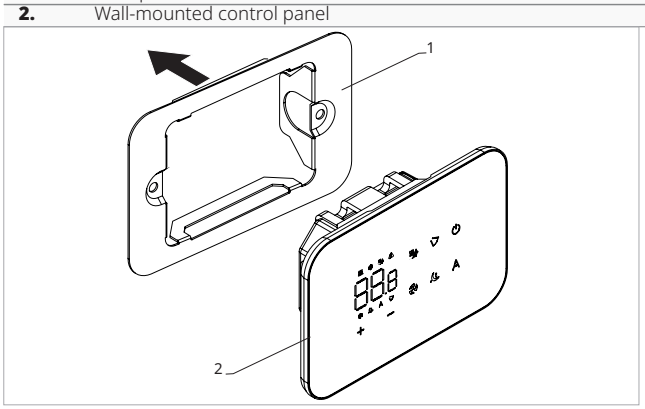

Before wall installation:
- ► separate the back plate from the control panel

1.	Fixing screws
2.	Back plate
3.	Holes for fixing to electrical box
4.	Electric box 503

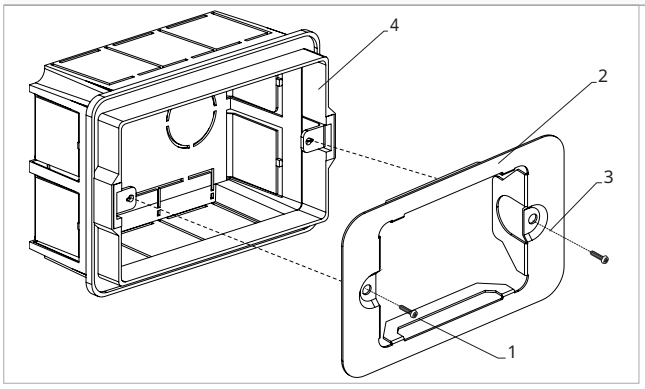

For wall mounting of the control panel:
- ► fix the control base to the electrical box 503 with screws
- ► connect the electrical wiring

⚠ It is mandatory to use ferrules on all conductors, both on the board side and on the wall-mounted terminal block side, to prevent permanent damage to the equipment.

To avoid incorrect temperature measurement:
- ► seal the cable entry points to prevent air from passing through
- ► seal all openings in the box or wall

⚠ proper sealing ensures the correct operation of the sensor and the reliability of thermal regulation

⚠ Before making the connections, please verify that the control terminal block is on the right-hand side.

1.	Electric box 503
2.	Back plate
3.	Wall-mounted control panel

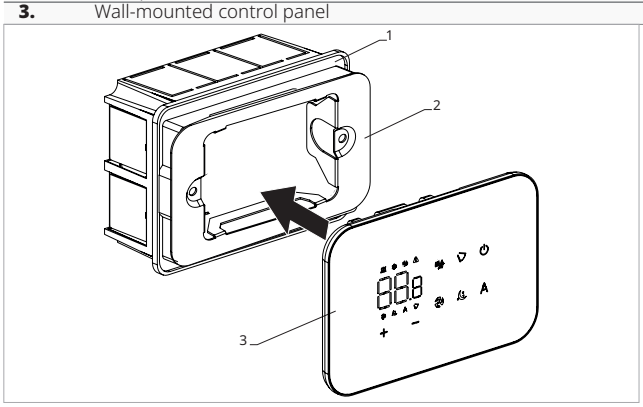

► reposition the control panel on the base

⚠ Pay attention not to crush the conductors when you close the control.

9.3 Single connection diagram

1.	Terminal block for device connection	**-+**	12 V-DC 1A power supply
CP	Presence contact (normally open)	**M7**	Command for wall control M7
BA	Serial connection for wall-mounted remote control		

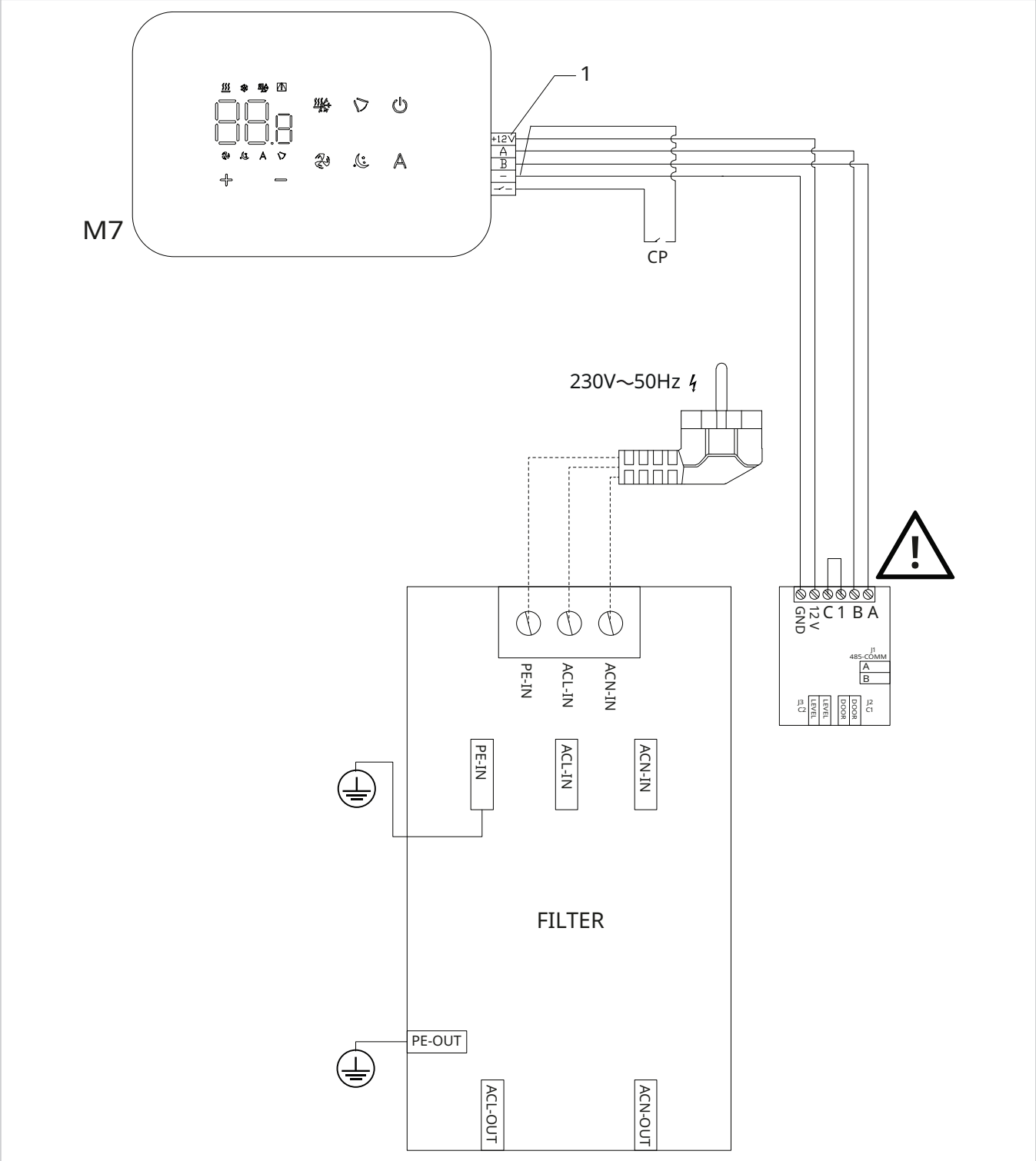

⚠ **Reverse A and B for connecting the wall control panel with the board.**

⚠ The app "Innova" is available to control the following command.

9.4 Multiple connection diagram

1.	Terminal block for device connection	**-+**	12 V-DC 1A power supply
CP	Presence contact (normally open)	**M7**	Command for wall control M7
BA	Serial connection for wall-mounted remote control		

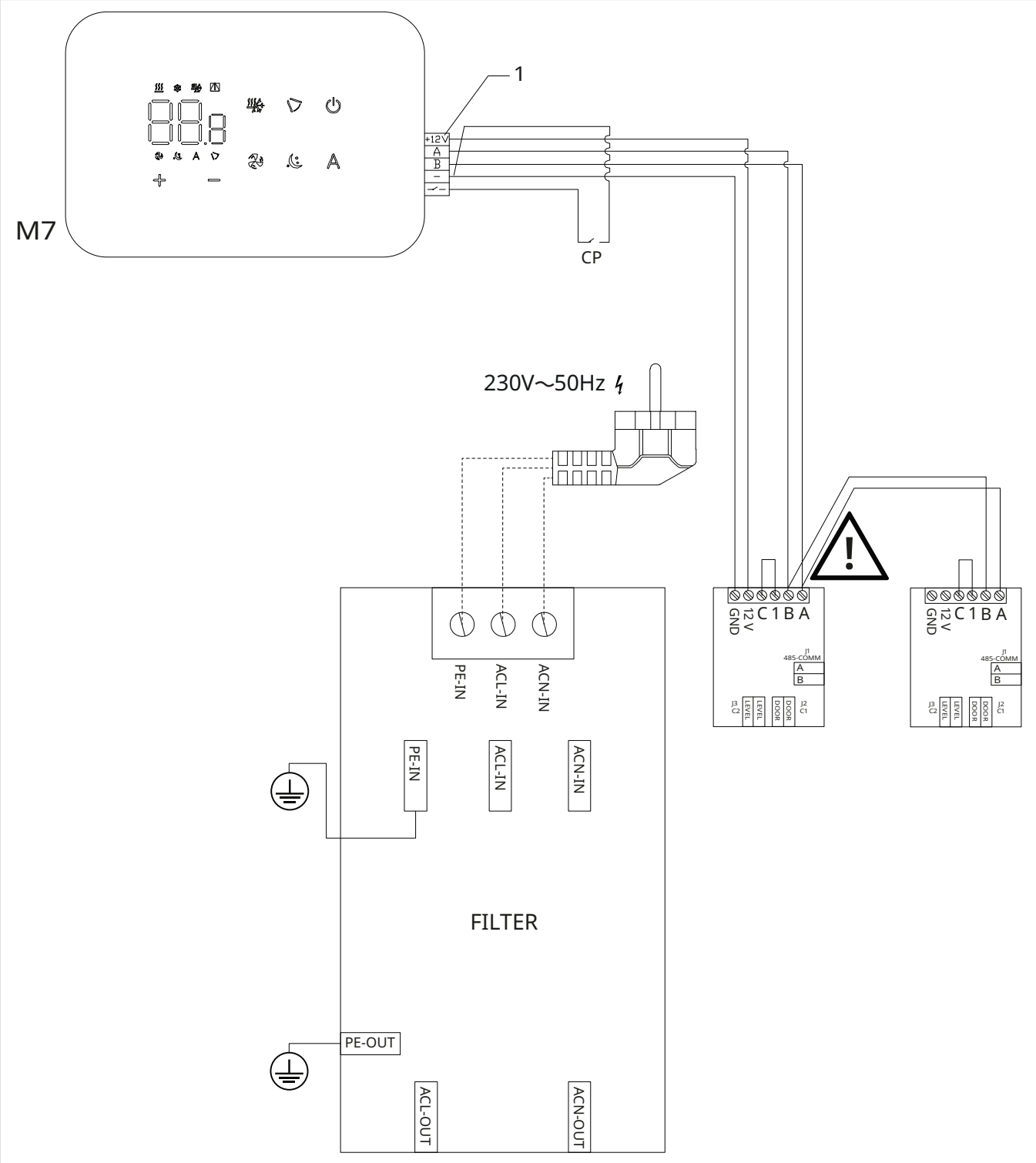

⚠ **Reverse A and B for connecting the wall control panel with the boards.**

⚠ For wall control code EFB749, the app is available.

9.5 Connections

9.5.1 Preliminary warnings

⚠ The terminals for connecting the control panel and the presence contact CP are inserted in a plastic bag and placed inside the electrical box.

⚠ It is mandatory to use ferrules on all conductors, both on the board side and on the wall-mounted terminal block side, to prevent permanent damage to the equipment.

1. Terminal blocks

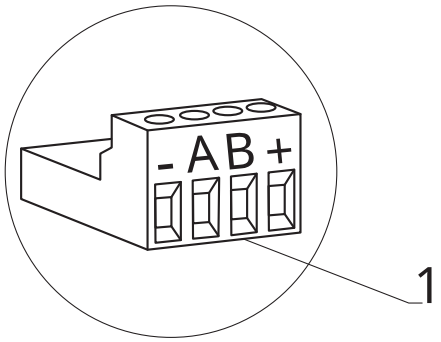

The terminals accept:

- rigid or flexible wires with a 0.2 to 1 mm² cross-section
- rigid or flexible wires with 0,5 mm² cross-section if two wires are connected to the same terminal block
- rigid or flexible wires with 0,75 mm² cross-section If the wires have wire end ferrules with a plastic collar

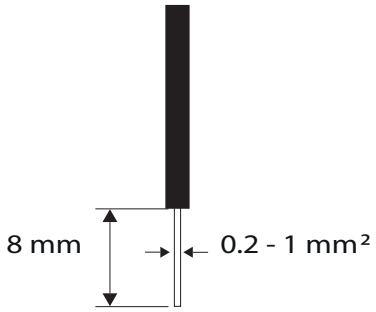

To connect the cables:

- ► strip 8 mm of the wire
- ► if the wire is rigid, you can insert it easily whereas
- ► if it is flexible, use appropriate crimp terminals
- ► push the wire in completely
- ► check the right fixing by pulling it gently

9.5.2 Control Panel

⚠ The control panel for wall control must be ordered separately.

Terminal block position:

1. Terminal block (Back view panel)

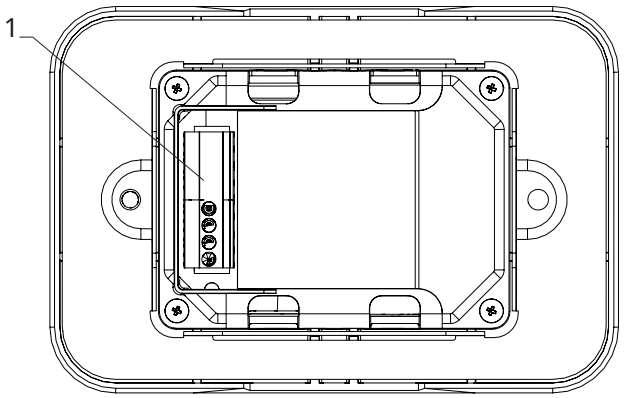

To make the connections:

- ► connect the power supply cables + and – to the GND and 12V terminals
- ► connect the ModBus serial connection cables to terminals A and B

⚠ Reverse A and B for connecting the wall control panel with the board.

9.5.3 Presence contact CP

Through this device it is possible to connect an external control signal that inhibits the operation of the control signal, for example:

- opening window contact
- remote on/off
- infrared presence sensor
- activation badge
- remote change of season

Function

The contact is normally open (NO).

- ► when closing the CP contact, connected to a potential-free contact, the device switches to stand-by mode
  CP appears on the display.
- ► At the touch of a button on the display the symbol ⚠ flashes.

⛔ It is forbidden to connect the CP input to that of another unit electronic board. Use separate contacts.

The CP presence contact can be configured for heating and cooling operation via the "To select digital input" *p. 58* settings menu item (digital input).

9.5.4 RS485 Serial Connection

The wall-mounted remote control can be connected through an RS485 serial line to one or more devices, up to a maximum of 16.

The devices must be equipped with an electronic board suitable for remote control.

For the connection:

- ► follow the indication on the connection diagram
- ► connect respecting the polarity indication A and B

⚠ Use a two core cable shielded cable suitable for the RS485 serial connection with a minimum section of 0,35 mm².

⚠ Keep the two core cable separate from power supply cable by a minimum of 50 mm.

⚠ Create a wire path in order to minimize the length of the lead wire.

⚠ Complete the line with the 120 Ω resistor.

⛔ It is forbidden make star connections.

9.5.5 Extended display

To enable device connectivity and enable selection of fan power level, the display must be extended. See section "Extended display" *p. 58*.

9.6 Functions

9.6.1 Basic menu

To access the basic menu

- ► with the display off, hold down ⏻ for 10 seconds
  The device turns on and appears
- ► keep pressed until the indication appears
- ► release the ⏻ key
  The symbol appears

To navigate in the menu

- ► use the icons

To select a menu item and to confirm the changes made

- ► press the icon ⏻
  Confirming the change takes you to the next item.

To exit the menu

- ► press the icon ⏻ for 10 seconds
- ► or wait 30 seconds

⚠ After a period of 30 seconds from the last action, the display exits the menu.

Menu items

ot: AIR probe offset (air probe setting)

ur: Value read by the R.H. sensor

ut: Probe Offset PT4

uS: Humidity setpoint

uI: Humidity hysteresis

CF: Scale

ub: Buzzer volume

uu: Wi-Fi reset

up: Wi-Fi pairing

ho: Hotel Mode

Set AIR probe offset

To set the air probe offset

- ► select
- ► press ⏻ to change settings
- ► increase or decrease the value with the icons
- ► press ⏻ to confirm
  By default it is set to -2,5°C.
  The setting range is from a minimum of -12.0 °C to a maximum of 12.0 °C.

Set probe offset RH

⚠ Modify only after real deviations from an actual measurement has been established with professional equipment.

To set the RH probe offset

- ► select
- ► press ⏻ to change settings
- ► increase or decrease the value with the icons
- ► press ⏻ to confirm
  By default it is set to -2.

Set the humidity setpoint

To set the humidity setpoint

- ► select
- ► press ⏻ to change settings
- ► increase or decrease the value with the icons
- ► press ⏻ to confirm
  By default it is set to 50.
  The setting range is from 20.0% to 90.0%.

Setting the humidity hysteresis

To set the humidity hysteresis

- ► select
- ► press ⏻ to change settings
- ► increase or decrease the value with the icons
- ► press ⏻ to confirm
  By default it is set to 5.

The setting range is from 1 (min) to 30 (max).

Scale

To change the temperature unit of measure

- ▶ select
- ▶ press to change settings
- ▶ select °C or °F
- ▶ press to confirm

By default the temperature unit of measure is ° C.

Adjusting the volume

To change the volume

- ▶ select
- ▶ press to change settings
- ▶ increase or decrease the value with the icons
- ▶ press to confirm

By default it is set to 1.
The volume setting range is from 00 (min) to 03 (max).

⚠ The volume changes after confirming the modification.

Factory reset

To reset the factory parameters

- ▶ select
- ▶ press to change settings
- ▶ select No to keep current parameters
- ▶ select Yes to reset the factory parameters
- ▶ press to confirm

By default digital input is set to No.

Wi-Fi reset

To reset the Wi-Fi credentials and return the device to its original configuration

- ▶ select
- ▶ press to change settings
- ▶ use the icons in sequence
  Appears
- ▶ press
  appears to reset Wi-Fi credentials.
- ▶ press to confirm
  Credentials have been reset.

Activate Wi-Fi

To activate Wi-Fi

- ▶ select
- ▶ press to change settings
- ▶ use the icons in sequence
  Appears
- ▶ press
  appears to enable Wi-Fi pairing.
- ▶ press to confirm
  appears, Wi-Fi is active.

⚠ The device remains visible on the App for the first 15 minutes after the device is switched on.

Setting the Hotel Mode

To set the Hotel mode

- ▶ select
- ▶ select YS to turn on Hotel mode
- ▶ select NO to turn off the Hotel mode

By default the device is set to NO.

Activating the Hotel mode:

- the Dehumidification Only and Automatic functions are deactivated
- only the Ventilation Only, Heating and Cooling functions remain active
- the temperature setting range is reduced, in Cooling you can set from 22 °C to 28 °C, in Heating you can set from 16 °C to 24 °C

9.6.2 Advanced Menu

⚠ **To access the setup menu, it is necessary to access the Basic menu. See section "Basic menu"** *p. 56***.**

The special functions menu can be accessed via the control panel.

To access the advanced menu

- ▶ from the basic menu press A
  Appears
- ▶ press the key once
  Appears
- ▶ press to confirm and log in
  The advanced menu is accessed.

To navigate in the menu

- ▶ use the icons

To select a menu item and to confirm the changes made

- ▶ press for 2 seconds
  Confirming the change takes you to the next item.

To exit the menu

- ▶ press for about 10 seconds
  Appears
- ▶ press for about 10 seconds
  The display turns off.
- ▶ or wait 30 seconds after the last action

⚠ After a period of 30 seconds from the last action, the display exits the menu.

Menu items

Ad: Not used

Pr: Not used

di: Options for digital input

t1: Not used

rH: Not used

rC: Not used

UC: Not used

Ac: Not used

Ah: Not used

Ed: Extended display

Ab: Enabling brightness sensor

Fr: Not used

To select digital input

To change the digital input

- ► select di
- ► press ⏻ to change settings
- ► select CP for presence contact (default)
- ► select CO to cooling open
- ► select CC to cooling close
- ► press ⏻ to confirm

By default digital input is set to CP.

⚠ For return to the default settings, set the digital input to "CP".

⚠ By selecting one of the other inputs (CO,CC) the seasonality is locked. It is not possible to modify it through the key of the control.

Extended display

⚠ **Allows device connectivity and enables the selection of the ventilation power level.**

⚠ To use the ventilation speed selection, it is necessary to enable the display extension.

To enable the display extension

- ► select Ed
- ► select no to disable
- ► select Ys to enable

By default, the device is set to no.

Optical sensor

⚠ By default, the brightness sensor is set.

To disable the brightness sensor:

- ► select Ab
- ► press ⏻

Appear Ys.

- ► press +
- ► select no
- ► press ⏻ to confirm

The brightness sensor is disabled.

⚠ The brightness sensor adapts to room lighting.

9.6.3 Alarm display on wall control panel

⚠ In the event of an alarm, the device still maintains active functions.

⚠ Alarm codes are shown on the on-board display. Refer to the "Visualization of alarms on display" *p. 41* chapter for the complete list.

10. MAINTENANCE

Routine maintenance is essential to keep the device efficient, safe, and reliable over time.

10.1 Preliminary warnings

⚠ **Please refer to chapter "Information about R32 refrigerant"** *p. 12* **for safety warnings concerning the refrigerant.**

This section is dedicated to the Authorised Service Centre. The features of the Authorised Service Centre are described in chapter "Recipients" *p. 8***.**

Before each cleaning and maintenance intervention:

- ► disconnect the device from the power supply by turning the system main switch to "OFF"
- ► wait for the components to cool down in order to avoid any burns

⊖ Carrying out any technical or cleaning work before disconnecting the unit from the power supply is forbidden.

⚠ Make sure that there is no voltage before servicing.

⚠ After completing the maintenance work, the unit must be restored its original condition.

⚠ Handle refrigerant with care. Leaking refrigerant can cause freezing.

10.2 Routine maintenance

The routine maintenance plan includes the following cleaning operations

Carry out cleaning:

- every six months

10.2.1 External cleaning

Clean the external surfaces with a soft damp cloth.

⚠ Disconnect the unit from the power supply before each cleaning and maintenance intervention by setting the main power supply switch to off.

⚠ Do not use abrasive sponges, or abrasive or corrosive detergents, as you might damage the painted surfaces.

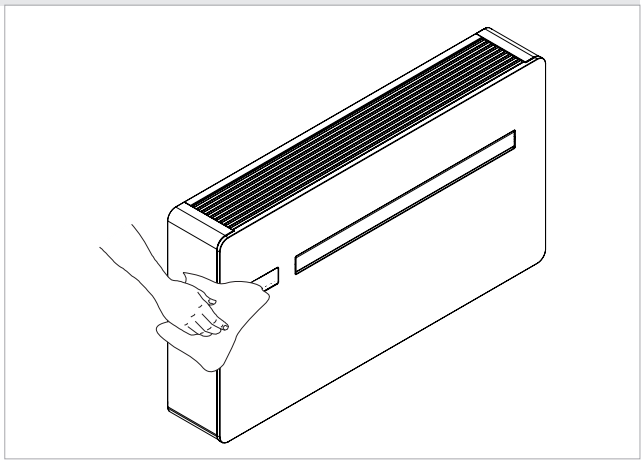

10.2.2 Cleaning the filters

Clean the air filter after a period of continuous use and according to the concentration of impurities in the air, or when you wish to start-up the appliance after a period of inactivity.

⚠ The filter is located in the bottom part of the appliance.

⚠ Wait for the components to cool down in order to avoid any burns.

⚠ Pay attention to the sharp edges.

⚠ For grille disassembly operations see chapter "Removal of aesthetic panels and grilles" *p. 35*.

⚠ For grille assembly operations see chapter "Assembly of aesthetic panels and grilles" *p. 36*.

To clean the filter

- ► extract the filter by lifting it
- ► remove the dust from the filter with a vacuum cleaner or by washing it in running water
- ► allow it dry
- ► put the filters back on top of the coils, taking care to position them correctly

⚠ Do not use detergents or solvents.

⚠ After filter cleaning check if the panel is properly mounted.

⊖ It is forbidden to use the device without mesh filter.

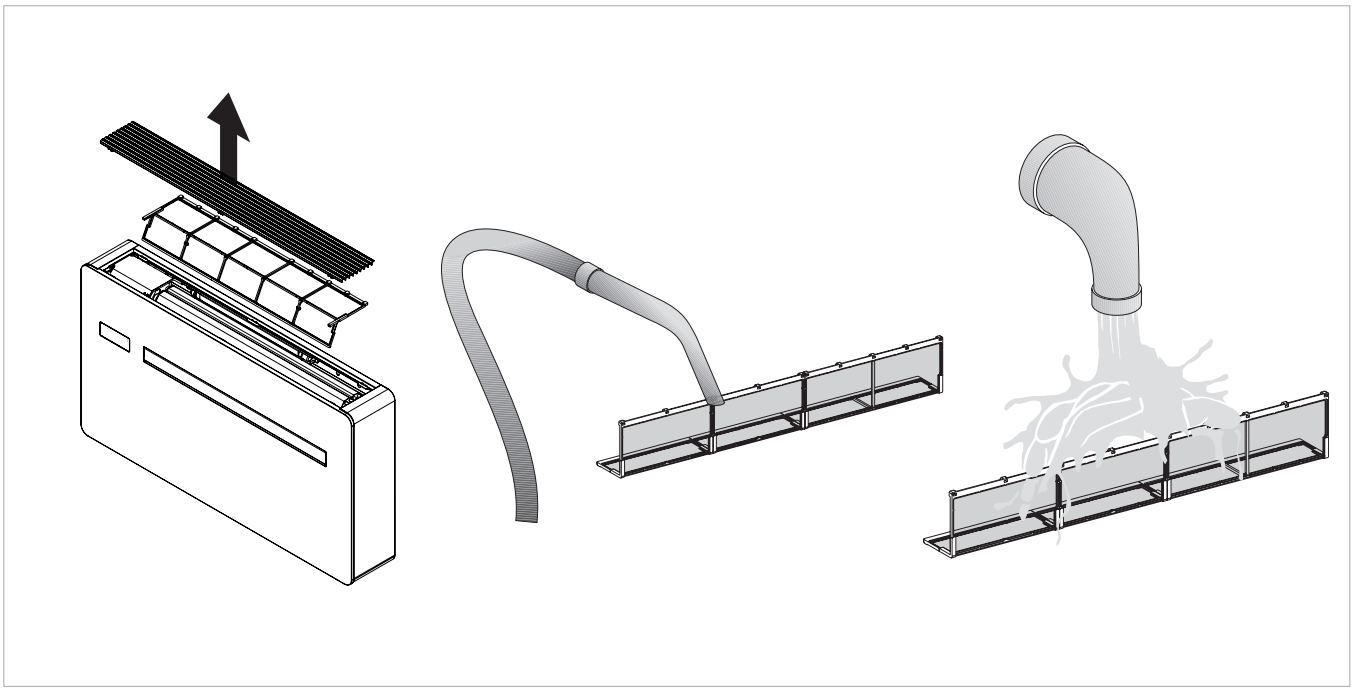

11. TROUBLESHOOTING

11.1 Troubleshooting table

⚠ The unit has a sealed cooling circuit on which it is not possible to work on the installed unit. If necessary, call the Technical Assistance Centre which will remove the unit for repair.

In the even of a malfunction, please refer to the following table. If, after performing the suggested checks, the problem is not solved, please contact the authorised technical assistance.

Anomalies	Possible causes	Remedies
The appliance doesn't switch on	No power supply	Check there is power supply (by turning a light on, for example).
		Check that the thermal-magnetic circuit breaker used exclusively to protect the appliance has not been tripped (if it has, reset it). If the problem repeats immediately, please call the Service Centre and avoid trying to make the appliance work.
	Remote control batteries have run out	Check that the appliance can be turned on using the touch-screen display and substitute the batteries.
The appliance does not cool/heat adequately.	The set temperature is too high or too low.	Check and, if necessary, adjust the temperature setting on the remote control
	The air filter is clogged	Check the air filter and clean it if necessary
	Check that there are no other obstacles to the air flow both inside and outside the appliance.	Remove anything that might block the air flow.
	The heating and cooling load has increased (for example, a door or a window has been left open or an appliance has been installed in the room which generates a lot of heat).	Try to reduce the heating and cooling load of the room following instructions below: Cover large windows exposed to sunlight with curtains or with external maskings (blinds, porches, reflecting films, etc.); The air conditioned room must remain closed for as long as possible; Avoid turning on halogen lamps or other high energy consumption appliances such as small ovens, steam irons, hot plates etc.).

11.2 Visualization of alarms on display

Code	Alarm description	Solution
Er01	Room temperature probe error (RT)	If the alarm does not automatically reset, disconnect and reconnect the power supply. If the alarm does not reset, contact the Authorised Service Centre.
Er02	Error of the temperature sensor of the internal heat exchanger (IPT)	If the alarm does not automatically reset, disconnect and reconnect the power supply. If the alarm does not reset, contact the Authorised Service Centre.
Er03	Error outdoor air temperature probe (OT)	If the alarm does not automatically reset, disconnect and reconnect the power supply. If the alarm does not reset, contact the Authorised Service Centre.
Er04	Error of the external heat exchanger temperature probe (OPT)	If the alarm does not automatically reset, disconnect and reconnect the power supply. If the alarm does not reset, contact the Authorised Service Centre.
Er05	Malfunctioning of the internal fan	Disconnect and restore power to the appliance. If the malfunction persists, contact the Authorised Service Centre.
Er06	Malfunction of the external fan	Disconnect and restore power to the appliance. If the malfunction persists, contact the Authorised Service Centre.
Er07	Driver communication error	Disconnect and restore power to the appliance. If the malfunction persists, contact the Authorised Service Centre.
Er08	Compressor discharge temperature probe (TD) error	If the alarm does not automatically reset, disconnect and reconnect the power supply. If the alarm does not reset, contact the Authorised Service Centre.
Er09	Communication error with remote thermostat M7	Check that thermostat M7 is switched on and that the set functions are activated on the appliance. Otherwise, contact the Authorised Service Centre.

Code	Alarm description	Solution
OF	Maximum level float intervention in the condensate drip tray (ALARM)	The condensate drain is not functioning properly, contact the Authorised Service Centre
CP	Open (CP) contact	Open contact. The appliance only switches on when the contact is closed, check the terminal connection.
Er12	Driver error - compressor failure	Disconnect and restore power to the appliance. If the malfunction persists, contact the Authorised Service Centre.
CE	Communication error between main circuit board and display	You cannot see the function on the display, please contact the Authorised Service Centre.
Er16	4-way valve management error or alarm for insufficient refrigerant charge	Disconnect and restore power to the appliance. If the malfunction persists, contact the Authorised Service Centre.
Er17	Driver parameter error or compressor incompatibility	Disconnect and restore power to the appliance. If the malfunction persists, contact the Authorised Service Centre.
Er19	Heating element safety temperature probe error (LEVEL)	If the alarm does not automatically reset, disconnect and reconnect the power supply. If the alarm does not reset, contact the Authorised Service Centre.
Er20	Error of the second temperature probe of the external heat exchanger (GT)	If the alarm does not automatically reset, disconnect and reconnect the power supply. If the alarm does not reset, contact the Authorised Service Centre.
Er22	Wrong power supply	Disconnect and restore power to the appliance. If the malfunction persists, contact the Authorised Service Centre.
Er23	UV lamp kit error	Disconnect and restore power to the appliance. If the malfunction persists, contact the Authorised Service Centre.
Er24	ERV kit error	Disconnect and restore power to the appliance. If the malfunction persists, contact the Authorised Service Centre.
BL	Key lock	To unlock the display, press simultaneously + - for 3 seconds.

11.3 Diagnosis of possible anomalies

If the conditioner blocks because of an alarm (see following table), please communicate to the assistance centre the code on the display to facilitate interventions.

11.3.1 Open CP contact

If the presence contact is not closed, the appliance will not start and the CP alarm appears on the display.
Please refer to chapter "CP occupancy contact input connection" *p. 32*.

11.3.2 Maximum condensate collection level warning

In heating operation, condensate drains free through the appropriate pipe.
In case of an OF alarm, check that the condensation drain line is not bent or obstructed to prevent water from draining out.

In cooling or dehumidification function, in extreme operating condition (high temperature and high humidity) the unit may not be able to automatically dispose of the produced condensate, in this case the display will show OF.
The OF sign, is not an error, but an alarm indicating that the water has reached the maximum level of the condensate drip tray.

In this case, it is necessary to drain the condensate manually:

- ► place a drip pan (not provided) below the condensate drain pipe
- ► drain the water using the cap on the condensate drain pipe

⚠ If after performing the procedure, the OF alarm remains, you should contact the Technical Service Center.

11.3.3 Use of the appliance

⚠ Objects or structural obstacles (furniture, curtains, plants, leaves, blinds, etc.) must not obstruct the normal air flow both from the internal and from the external grilles.

⚠ Do not lean against, or worse sit on, the body of the conditioner, this would damage the appliance.

⚠ Do not move the horizontal air outlet flap manually. Always use the remote control to perform such operation.

⚠ If water leaks from the device, you must switch it off immediately and disconnect the power supply. Then, call the nearest customer service centre.

⚠ During heating mode, the conditioner eliminates periodically any ice formed on the external battery. In such situation, the machine keeps on working, but it does not dispense warm air to the room. This phase can last from 3 up to maximum 10 minutes.

⚠ The appliance must not be installed in rooms where explosive gases develop or where there are humidity and temperature conditions that exceed the maximum levels reported on the installation manual.

⚠ Clean the air filter regularly as described in the specific paragraph.

12. TECHNICAL INFORMATION

12.1 Technical data

			..2.0 - 12 HP AUSTRALIA
Models		u.m.	**12 HP**
Cooling performance (AT 35°C; AT 27°C)			
Maximum cooling capacity Dual Power	(1)	kW	4,10
Rated cooling capacity	(1)	kW	2,40
Minimum Cooling Capacity	(1)	kW	1,40
Dehumidification capacity		L/h	1,50
total input power		kW	0.77
Energy efficiency class	(2)		A
EER			3.1
SEER			4,20
Energy efficiency class (EN 14825)	(3)		
Heating performance (AT 7°C; AT 20 °C)			
Maximum heat output Dual Power	(4)	kW	4,05
Rated heat power	(4)	kW	2.35
Electric heater additional power		kW	NA
Minimum heat output	(4)	kW	1,35
Total absorbed power	(4)	kW	0.75
COP			3.1
Energy efficiency class	(2)		
SCOP			3,50
Energy efficiency class (EN 14825)	(3)		
Airflow data for the room side			
Ventilation speed	(5)	Nr.	3+2
Electrical data			
Maximum absorbed power	(6)	kW	3,30
Maximum absorbed current	(6)	A	14,30
Power Supply		V/ph/Hz	230/1/50
General characteristics			
Maximum indoor air flow		m^3/h	500
Maximum external air flow		m^3/h	750
Medium indoor air flow		m^3/h	400
Medium air flow external		m^3/h	550

1. Outdoor air temperature 35 °, relative humidity 41%. Ambient temperature 27 ° C; relative humidity 47%. Performance according to EN 14511
2. Energy Efficiency according to Directive 626/2011- Valid for tax deduction
3. Energy classification according to EN 14825: 2022
4. Fresh air temperature 7 °C, relative humidity 87%. Room temperature 20°C, relative humidity 59% (max). Performance according to UNI 14511
5. 3 manual speed + auto speed + boost speed
6. Data calculated with electric heating element set at maximum power (1.8 kW).
7. Internal side sound pressure measured in semi-anechoic chamber at a distance of 2 m.

			..2.0 - 12 HP AUSTRALIA
Models		u.m.	**12 HP**
Minimum indoor air flow		m^3/h	300
Minimum external air flow		m^3/h	400
Type of compressor			Rotary - DC Inverter
Refrigerant gas data			
Type of refrigerant			R32
Quantity of refrigerant		kg	0,50
Sound data			
Nominal sound pressure	(7)	dB(A)	46
Minimum sound pressure level	(7)	dB(A)	30

1. Outdoor air temperature 35 °, relative humidity 41%. Ambient temperature 27 ° C; relative humidity 47%. Performance according to EN 14511
2. Energy Efficiency according to Directive 626/2011- Valid for tax deduction
3. Energy classification according to EN 14825: 2022
4. Fresh air temperature 7 °C, relative humidity 87%. Room temperature 20°C, relative humidity 59% (max). Performance according to UNI 14511
5. 3 manual speed + auto speed + boost speed
6. Data calculated with electric heating element set at maximum power (1.8 kW).
7. Internal side sound pressure measured in semi-anechoic chamber at a distance of 2 m.

Operating limits

	Room temperature T	**External temperature T**
Maximum operating temperature in cooling mode	DB 32 °C - WB 29 °C	52 °C
Minimum operating temperature in cooling mode	DB 16 °C - WB 10 °C	-5 °C
Maximum operating temperatures in heating mode	31 °C	20 °C
Minimum operating temperatures in heating mode	5 °C	-20 °C *(1)*

1. ELEC models can operate at temperatures as low as -25°C with the compressor turned off.

12.2 Dimensions

		..2.0 - 12 HP AUSTRALIA
Models	u.m.	**12 HP DC Inverter**
Product dimensions and weight		
Width	mm	1.010
Height	mm	549
Total depth	mm	165
Empty weight	kg	41,0
Wall hole diameter	mm	202
Wall holes distance	mm	293

12.3 RED Compliance Statement

Compliance with 2014/53/EU Radio Equipment Directive (RED).
In accordance with Article 10.8(a) and 10.8(b) of the RED, the following table provides information on the frequency bands used and the maximum RF transmit power of the product for sale in the EU:

Frequency range (MHz)	**Max. Transmit Power**
2400-2472	<20

Hereby, the company declares that the device is in compliance with Directive 2014/53/EU.

⚠ For declarations of conformity, certificates and other certification details please consult the website.

This equipment should be installed and operated with a minimum distance of 20 centimeters between the radiator and your body.

12.4 Safety

This equipment is designed with the utmost care for the safety of those who install and use it.
However, special attention must be paid to the dangers of electric shock and static electricity when working with electrical equipment.

All guidelines must therefore be allowed at all times to ensure safe use of the equipment.

12.5 FCC Declaration of Conformity

This equipment complies with FCC radiation exposure limits set forth for an uncontrolled environment.
To avoid the possibility of exceeding the exposure limits, maintain a distance of not less than 0.5 cm between the antenna and the person during normal operation.

12.5.1 Warnings

⚠ This wireless device uses and can radiate radio frequency energy and, if not installed and used in accordance with the instructions, may cause harmful interference to radio communications.

⚠ This device must not be placed or used in conjunction with any other antenna or transmitter.

⚠ This equipment complies with the limits for a Class B digital device, pursuant to FCC Rules.

⚠ The limits are designed to provide reasonable protection against harmful interference in a residential installation.

12.5.2 Notes on Wi-Fi communication

This equipment complies with the limits for a Class B digital device, pursuant to FCC Rules.

In case of interference:

- increase the distance between the object and the receiver
- immediately contact an Authorised Service Centre or suitably qualified personnel

EU countries intended for use

The version of this device is intended for home and business use in Austria, Belgium, Bulgaria, Cyprus, Czech Republic, Denmark, Estonia, Finland, France, Germany, Greece, Hungary, Ireland, Italy, Latvia, Lithuania, Luxembourg, Malta, the Netherlands, Poland, Portugal, Romania, Slovakia, Slovenia, Spain, Sweden, Turkey and the United Kingdom and is also authorised in the EFTA Member States: Iceland, Liechtenstein, Norway and Switzerland.

EU countries not intended for use

None.

icap pty ltd

PO Box 1052
South Perth WA 6107
www.icap.net.au

innova

INNOVA S.r.l.
Via I Maggio 8 - 38089 Storo (TN) - ITALY
tel. +39.0465.670104 – fax +39.0465.674965
info@innova.it

realized by Innova technical dept.